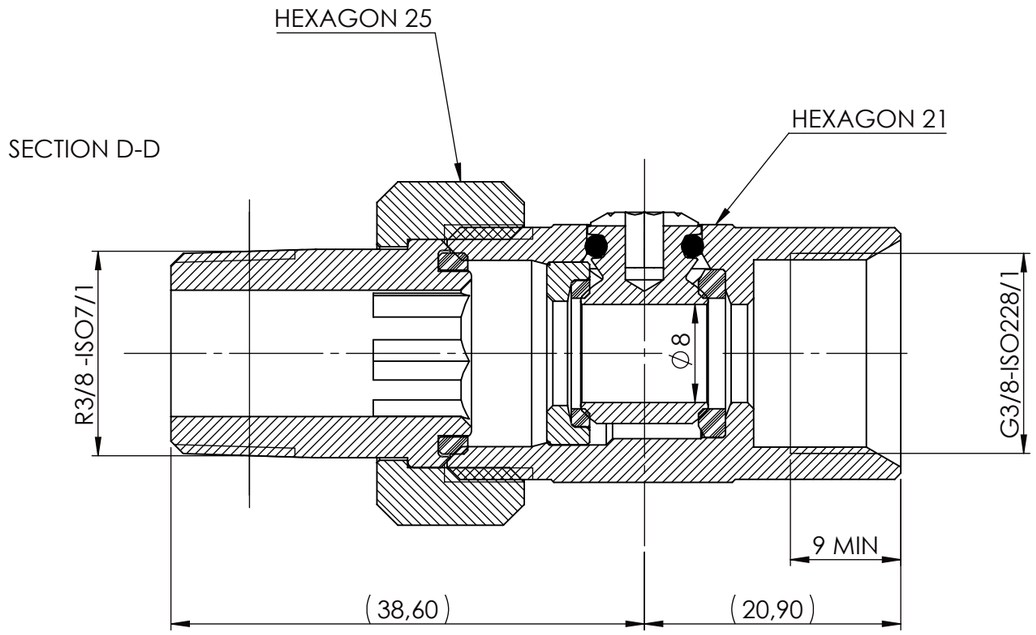


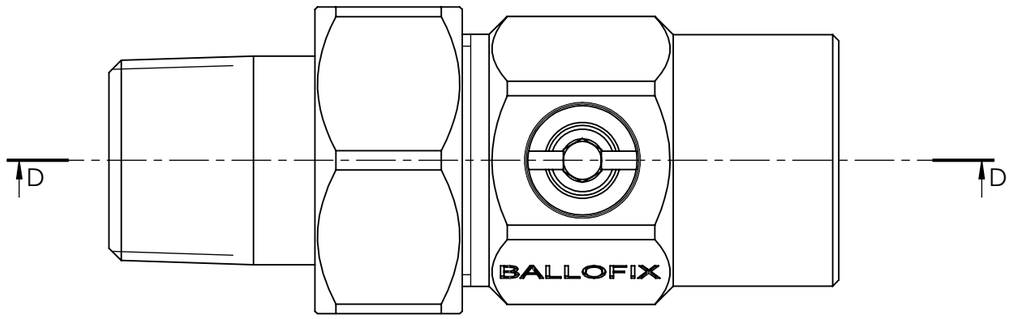


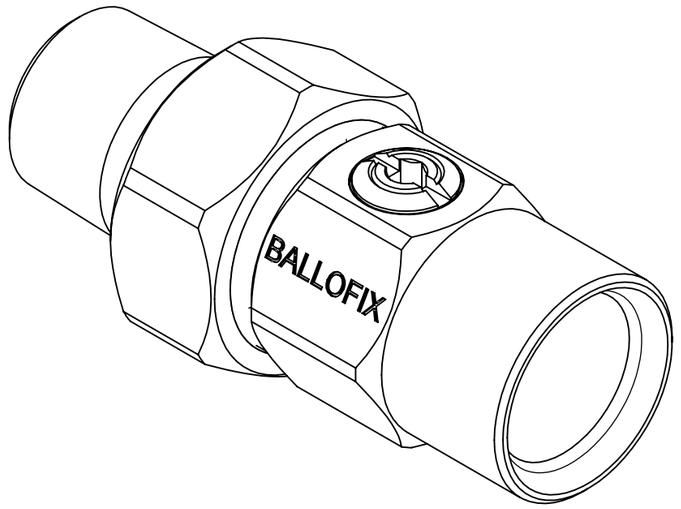


Geometric tolerance after ISO 14638

| QDA | DCN | REV. | CHANGE | DATE | BY |
|---|---|---|---|---|---|
| | | 00 | | | |

BROEN VALVE TECHNOLOGIES

| | | | |
|---|---|---|---|
| MATERIAL ~~Material~~ <not specified> | WEIGHT (g) 116.39 | | SCALE |
| | DRAW. KL | DATE 17-11-2016 | 2:1 |
| PART | APPR. KL | DATE 21-06-2017 | |
| PRODUCT Ballofix®DN10R | DRAWING NUMBER | | |
| CONNECTIONS G3/8 x R3/8 | 3224400 | | |

UNSPECIFIED TOLERANCES
ANGLES ± 2°
OTHER DIM. ± 0,2

This drawing is our property and may not be transferred to third party, copied or made use of without our permission.

SP no.:

Sheet1 of 1