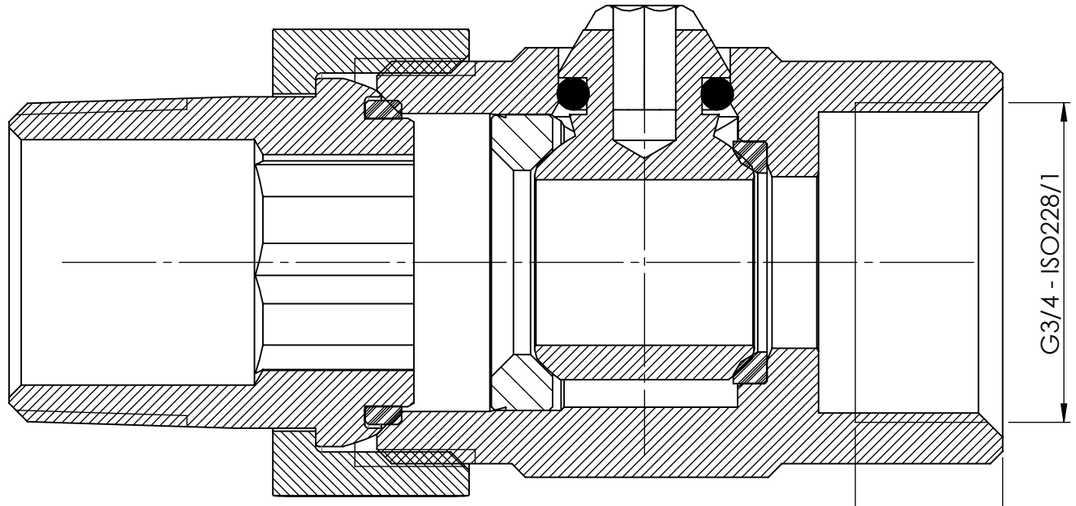

SECTION D-D

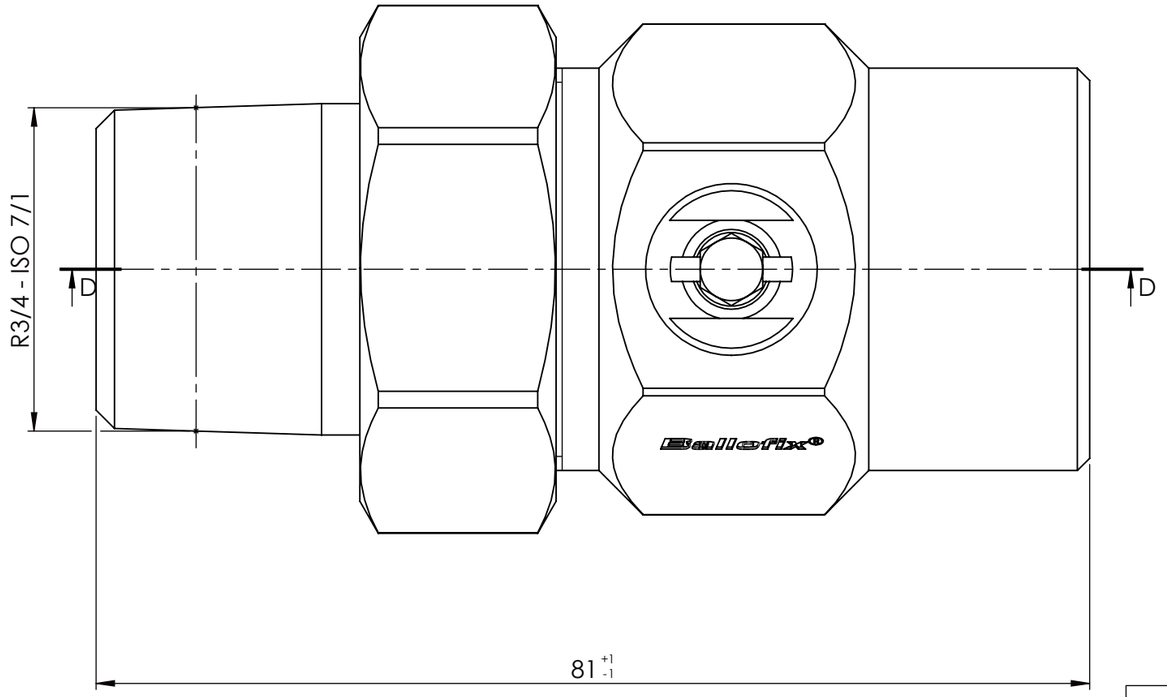

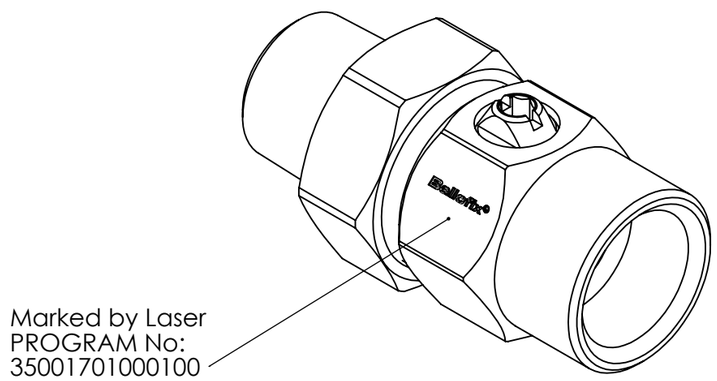

Geometric tolerance after ISO 14638

		01		08-07-2020	KL
QDA	DCN	REV.	CHANGE	DATE	BY

BROEN VALVE TECHNOLOGIES

MATERIAL Material <not specified>	WEIGHT (g) 384.49		SCALE 2:1
	DRAW. KL	DATE 22-10-2013	
PART	APPR. KL	DATE 08-07-2020	
PRODUCT Radiator Ballofix	DRAWING NUMBER 3408400		
CONNECTIONS G3/4 x R3/4			

UNSPECIFIED TOLERANCES
ANGLES ± 2°
OTHER DIM. ± 0,2

This drawing is our property and may not be transferred to third party, copied or made use of without our permission.

SP no.:

Sheet1 of 1