HC137

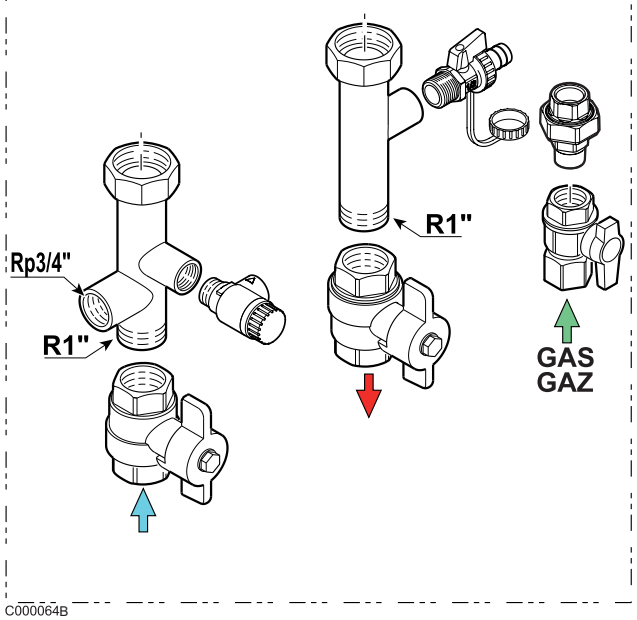


C000064B

HC139

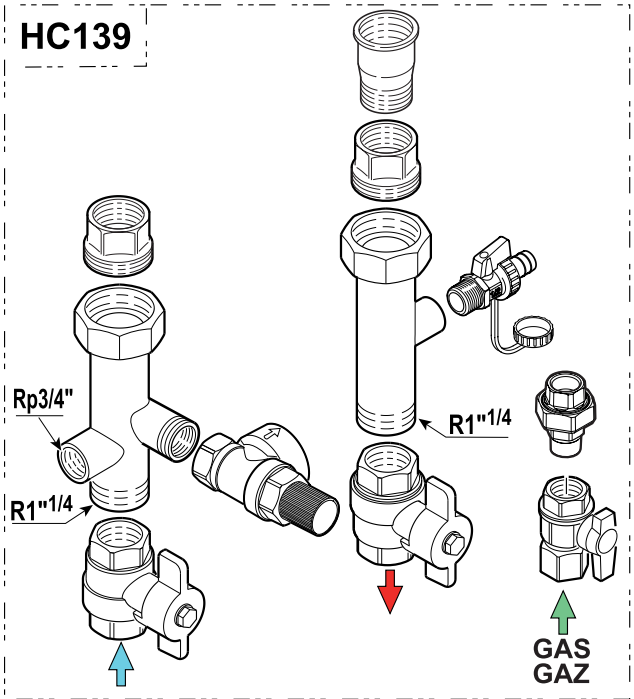


C000066B

HC138
HC176

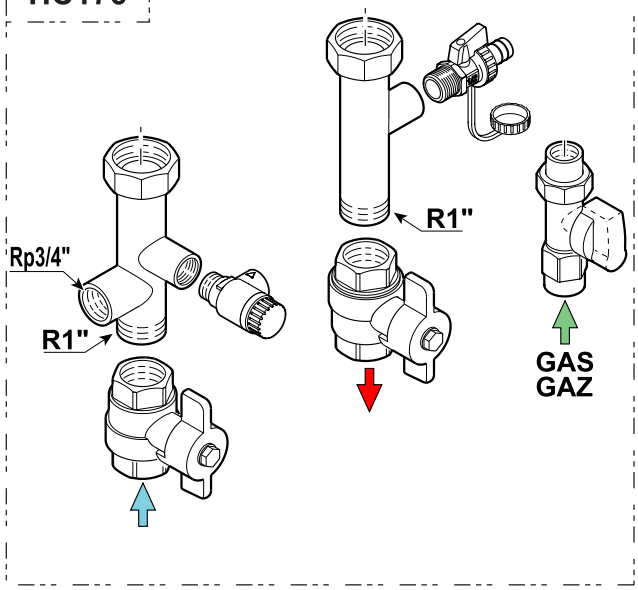


C000065A

HC140
HC177

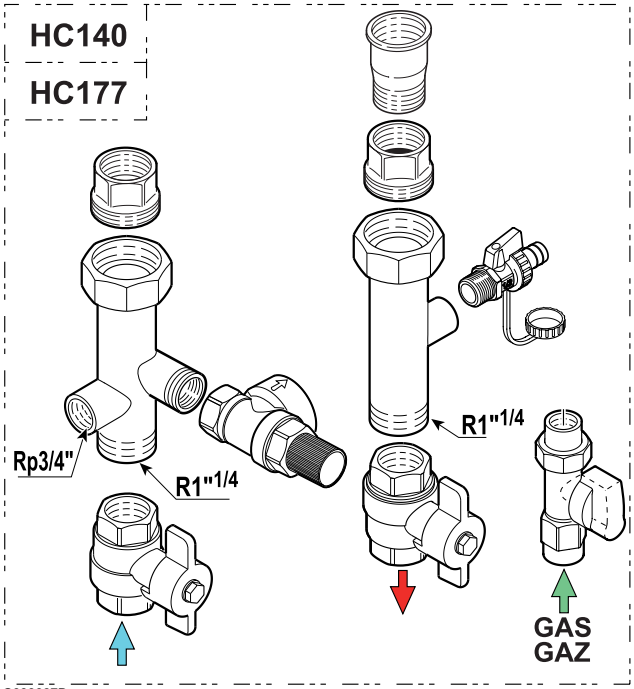


C000067B