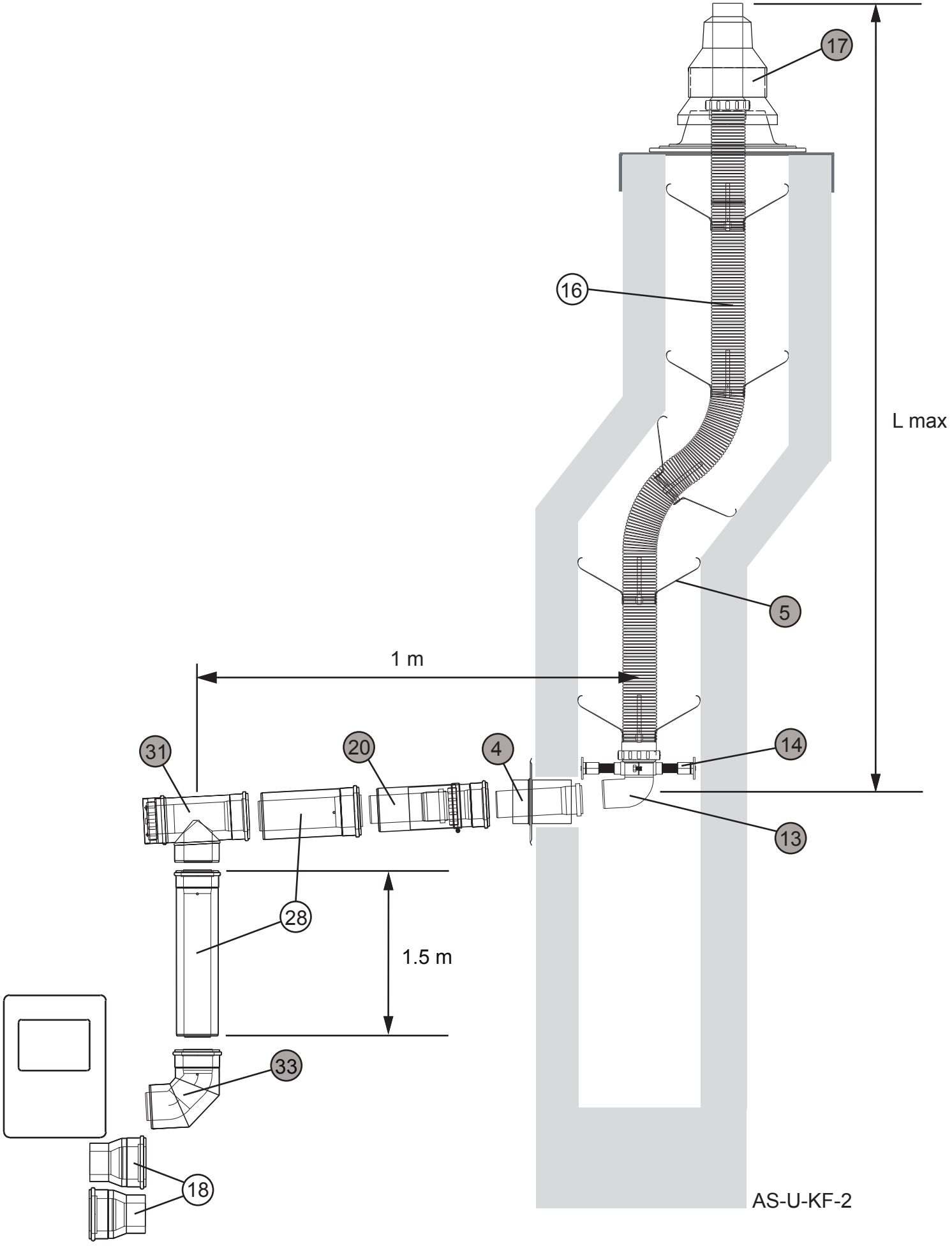
17
16
L max
5
1 m
31
20
4
14
13
28
1.5 m
33
18
AS-U-KF-2