

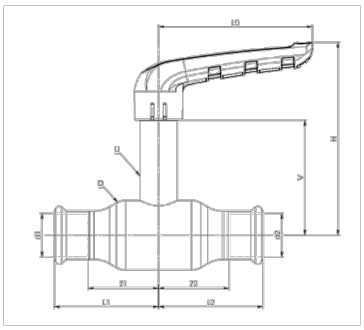

VSH XPress Carbon FullFlow ball valve high (press)

XPR10101

XPress

Approvals

Assortment

Art. No	Size	Item weight	l x w x h	Packaging	GTIN
1010000101	15 (DN10)	0.25 kg	122x120x26	Bag (1 pce)	05708537596625
1015000101	18 (DN15)	0.30 kg	127x124x30	Bag (1 pce)	05708537596687
1020000101	22 (DN20)	0.30 kg	134x130x38	Bag (1 pce)	05708537596748
1025000101	28 (DN25)	0.69 kg	168x148x45	Bag (1 pce)	05708537596786
1032000101	35 (DN32)	0.99 kg	180x159x57	Bag (1 pce)	05708537596847
1040000101	42 (DN40)	1.62 kg	219x190x68	Bag (1 pce)	05708537596908
1050000101	54 (DN50)	2.55 kg	233x208x85	Bag (1 pce)	05708537596960

Dimensions

Art. No	Size	L0	l1	d1	D1	z1	l2	d2	D2	z2
1010000101	15 (DN10)	75	47	15.3 (DN10)	23	27	47	15.3 (DN10)	23	27
1015000101	18 (DN15)	75	51.5	18.3 (DN15)	27	32	51.5	18.3 (DN15)	27	32
1020000101	22 (DN20)	75	60.5	22.3 (DN20)	32	40	60.5	22.3 (DN20)	32	40
1025000101	28 (DN25)	100	67.5	28.3 (DN25)	38	45	67.5	28.3 (DN25)	38	45
1032000101	35 (DN32)	100	80.5	35.3 (DN32)	45	55	80.5	35.3 (DN32)	45	55
1040000101	42 (DN40)	119	99	42.4 (DN40)	54	70	99	42.4 (DN40)	54	70
1050000101	54 (DN50)	119	113	54.4 (DN50)	65	79	113	54.4 (DN50)	65	79

Characteristics

Colors	Silver
Materials	Steel (St 37.8 (1.0345))
Manufacturer	Broen
Shape	Straight
Connection type	Press (M)

Technical specifications

Max. operating pressure	16 bar (liquid)
Min. temperature	-35ºC
Max. temperature	135ºC

General

Category	Valves
ETIM class	EC011343 Ball valve
Intrastat code	84818081