Data sheet

valid from: 24/01/25



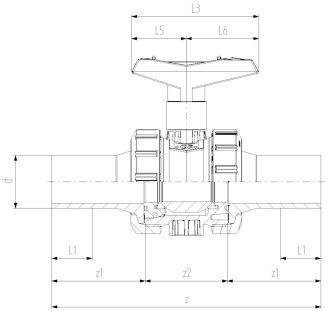

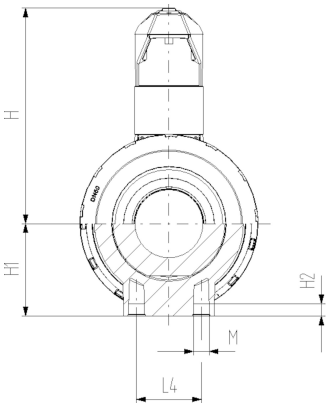

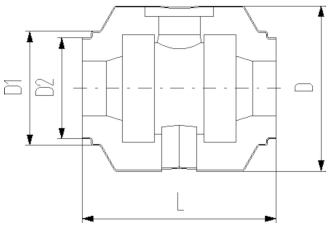

COOL-FIT 4.0 Valvola a sfera tipo 546, comando manuale

Model:

- Materiale: ABS con attacco filettato PE100 SDR11, metrico
- Tenuta sfera in PTFE
- Inserti di fissaggio in acciaio inox integrati
- Comprese le semisole isolanti
- Raccordi separati di tipo A necessari per la giunzione

d (mm)	DN (mm)	PN	kv-value (Δp=1 bar) (l/min)	SDR	EPDM code	NPK	weight (kg)
32	25	10	700	11	**138 546 108**	**456 112**	0.542
40	32	10	1000	11	**138 546 109**	**456 113**	0.887
50	40	10	1600	11	**138 546 110**	**456 114**	1.165
63	50	10	3100	11	**138 546 111**	**456 115**	2.100
75	65	10	5000	11	**138 546 112**	**456 116**	5.125
90	80	10	7000	11	**138 546 113**	**456 117**	7.173

d (mm)	D (mm)	D1 (mm)	D2 (mm)	L (mm)	L1 (mm)	L3 (mm)	H (mm)	H1 (mm)	H2 (mm)	z (mm)	z1 (mm)	z2 (mm)
32	135	97	82	152	36	97	98	36	12	223	76	76
40	157	117	97	170	40	128	119	44	15	249	82	82
50	169	117	97	184	44	128	125	51	15	271	91	91
63	204	132	117	227	48	152	150	64	15	321	110	110
75	235	147	132	276	55	270	194	85	15	386	125	125
90	255	168	147	297	62	270	200	105	15	421	140	140

The technical data are not binding. They neither constitute expressly warranted characteristics nor guaranteed properties nor a guaranteed durability. They are subject to modification. Our General Terms of Sale apply.

Georg Fischer Piping Systems Ltd, Postfach, CH-8201 Schaffhausen/SwitzerlandPhone +41 -(0)52-631 1111e-mail: info.ps@georgfischer.comInternet: http://www.gfps.com