Data sheet

valid from: 02/08/24



COOL-FIT 4.0 Curva 45°, d250-450

Model:

- PE100 pre-isolato SDR 17 metrico
- Isolamento in schiuma GF HE
- Rivestimento esterno resistente agli urti. Colore: nero
- B: Raccordo a colonna con estremità libera (raccordo separato per elettrofusione necessario per l'adesione)

d (mm)	D (mm)	DN (mm)	SDR	PN (bar)	code	NPK	weight (kg)	code	PF	NPK
250	355	250	17	10	**738 053 121**		12.840			
280	400	250	17	10	**738 053 122**		18.000			
315	450	300	17	10	**738 053 123**		21.360			
355	500	350	17	10	**738 053 124**		18.720			
400	560	400	17	10	**738 053 175**		43.920			
450	630	450	17	10	**738 053 176**		54.360			

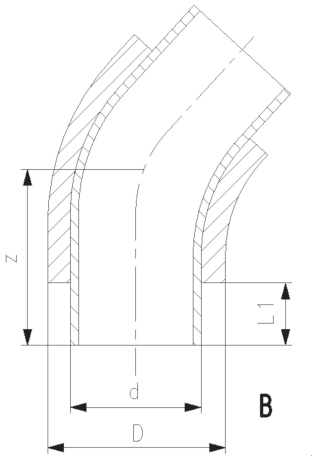

d (mm)	L1 (mm)	Type	z (mm)
250	123	B	440
280	126	B	460
315	133	B	535
355	148	B	620
400	150	B	650
450	165	B	680

The technical data are not binding. They neither constitute expressly warranted characteristics nor guaranteed properties nor a guaranteed durability. They are subject to modification. Our General Terms of Sale apply.

Georg Fischer Piping Systems Ltd, Postfach, CH-8201 Schaffhausen/Switzerland Phone +41 -(0)52-631 1111 e-mail: info.ps@georgfischer.com Internet: http://www.gfps.com