Data sheet

valid from: 27/08/2024

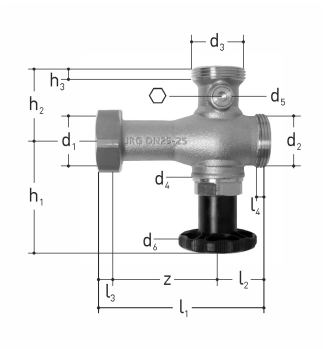

JRG LegioStop JRGUSIT NG Robinet de distribution, Bronze

- Température : max. 90°C
- Matériel: bronze, acier inoxydable, EPDM, plastique
- Raccordement: principal filetage intérieur, sortie filetage extérieur
- Chapeau : Voir 5158

DN (mm)	Pouces (inch)	DN-DN (mm)	JRG Code	CAN	GF Code	CAN	SP	Poids (kg)
25	1	25-20	**5151.100**		**350 835 220**	**622 116**	1	0.750
25	1	25-25	**5151.110**		**350 835 320**	**622 136**	1	0.900
32	1 ¼	32-20	**5151.200**		**350 835 420**	**622 117**	1	0.850
32	1 ¼	32-25	**5151.210**		**350 835 520**	**622 137**	1	1.000
32	1 ¼	32-32	**5151.220**		**350 835 620**	**622 157**	1	1.150
40	1 ½	40-20	**5151.300**		**350 835 720**	**622 118**	1	0.950
40	1 ½	40-25	**5151.310**		**350 835 820**	**622 138**	1	1.100
40	1 ½	40-32	**5151.320**		**350 835 920**	**622 158**	1	1.250
40	1 ½	40-40	**5151.330**		**350 836 020**	**622 217**	1	1.500

d1 G (inch)	d2 G (inch)	d3 G (inch)	d4 G (inch)	d5 Rp (inch)	d6 (mm)	h1 (mm)	h2 (mm)	h3 (mm)	l1 (mm)	l2 (mm)	l3 (mm)	l4 (mm)	PN (bar)	z (mm)	⬡ (mm)
1 ¼	1 ¼	1	¾	¼	53	85	55	7	128	37	8	8	16	83	6
1 ¼	1 ¼	1 ¼	1	¼	60	87	55	8	128	37	8	8	16	83	6
1 ½	1 ½	1	¾	¼	53	85	56	7	139	42	9	9	16	89	6
1 ½	1 ½	1 ¼	1	¼	60	87	56	8	139	42	9	9	16	89	6
1 ½	1 ½	1 ½	1 ¼	¼	70	91	56	9	139	42	9	9	16	89	6
1 ¾	1 ¾	1	¾	¼	53	85	57	7	150	45	10	10	16	96	6
1 ¾	1 ¾	1 ¼	1	¼	60	87	57	8	150	45	10	10	16	96	6
1 ¾	1 ¾	1 ½	1 ¼	¼	70	91	57	9	150	45	10	10	16	96	6
1 ¾	1 ¾	1 ¾	1 ½	¼	90	97	57	10	150	45	10	10	16	96	6

The technical data are not binding. They neither constitute expressly warranted characteristics nor guaranteed properties nor a guaranteed durability. They are subject to modification. Our General Terms of Sale apply.

Georg Fischer Piping Systems Ltd, Postfach, CH-8201 Schaffhausen/SwitzerlandPhone +41 -(0)52-631 1111e-mail: info.ps@georgfischer.comInternet: http://www.gfps.com