JRG

+GF+

Montageanleitung / Instructions de montage
Instruzioni per il montaggio / Installation instructions

JRG Anschlussgarnitur zu JRG Code 5917.320
JRG Garniture de raccordement pour JRG Code 5917.320
JRG Accessori di raccordo per JRG Codice 5917.320
JRG Connection part to JRG Code 5917.320

JRG Code 5918.320

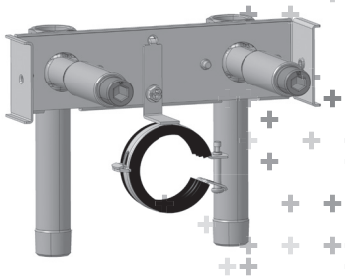

Georg Fischer JRG AG
Hauptstrasse 130, CH-4450 Sissach
Phone +41 (0)61 975 22 22, Fax +41 (0)61 975 22 00
info.jrg.ps@georgfischer.com

www.gfps.com

Ident. Nr. 355 566 581 / 1. / DH / 01.18 / ©Georg Fischer JRG AG

1

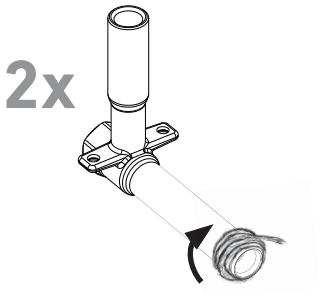

2

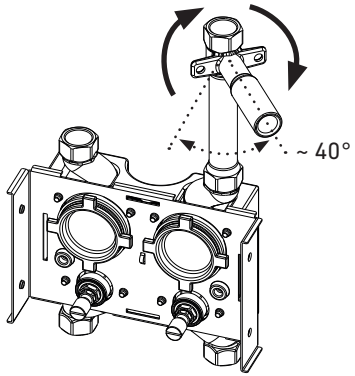

3

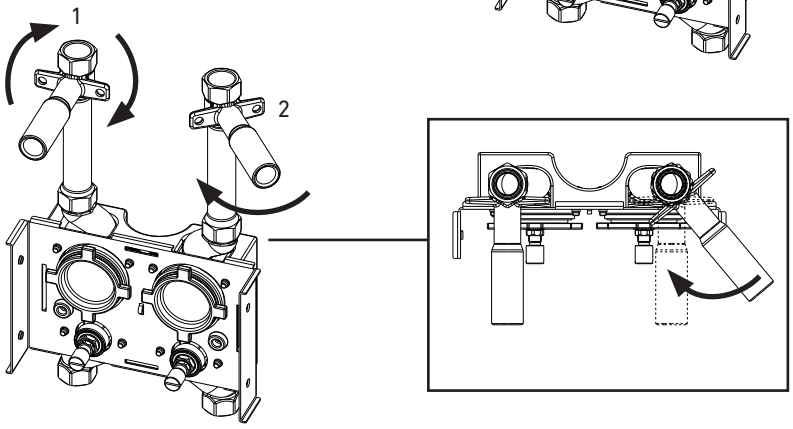

4

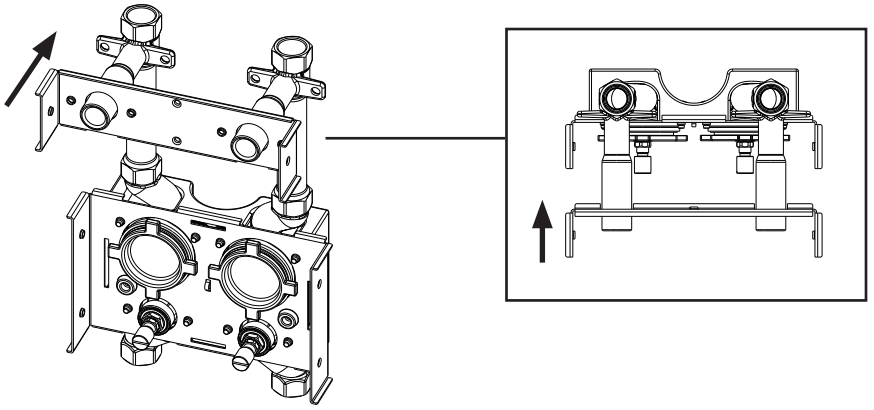

5

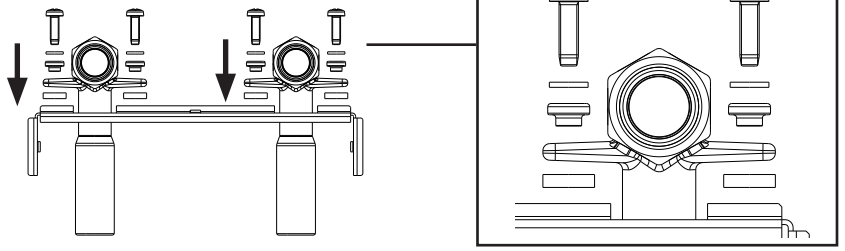

6

