**Montage instructie**
**Assembly instructions**
**Instructions de montage**
**Montageanweisung**
**Instrucciones para el montaje**
**Istruzioni di montaggio**

# Hijsen / uitpakken / plaatsen
# Lifting / unpacking / positioning
# Hisser / déballer / positionnner
# Heben / auspacken/ aufstellen
# Elevación / desembalaje / posicionamiento
# Sollevamento / spacchettamento / posizionamento

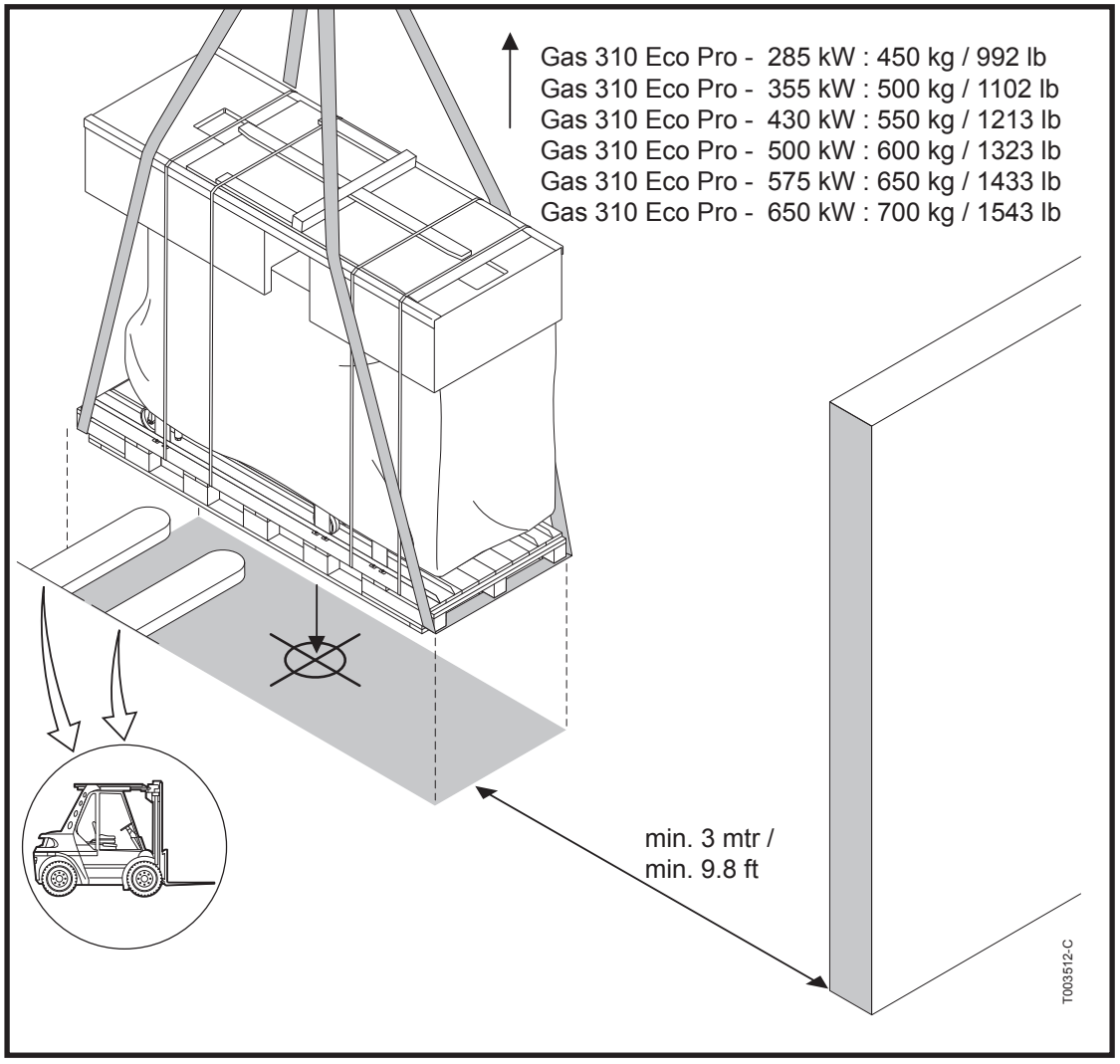


**Warning**
Before installing, first read the installation & operating manual.

**Attention**
Avant installer, lisez la notice installation et d'utilisation.

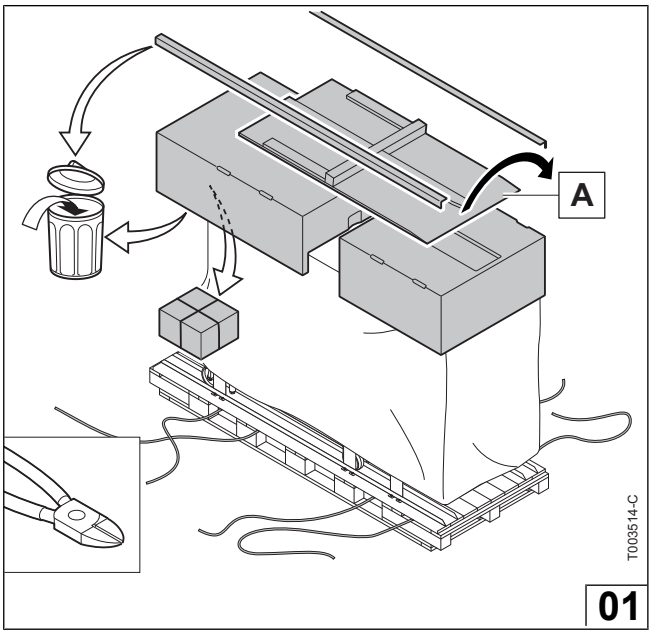
A
T003514-C
01

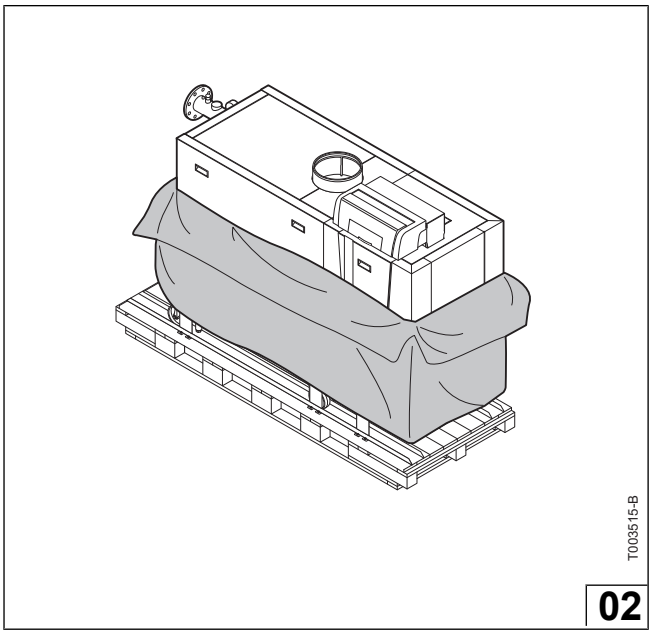
T003515-B
02

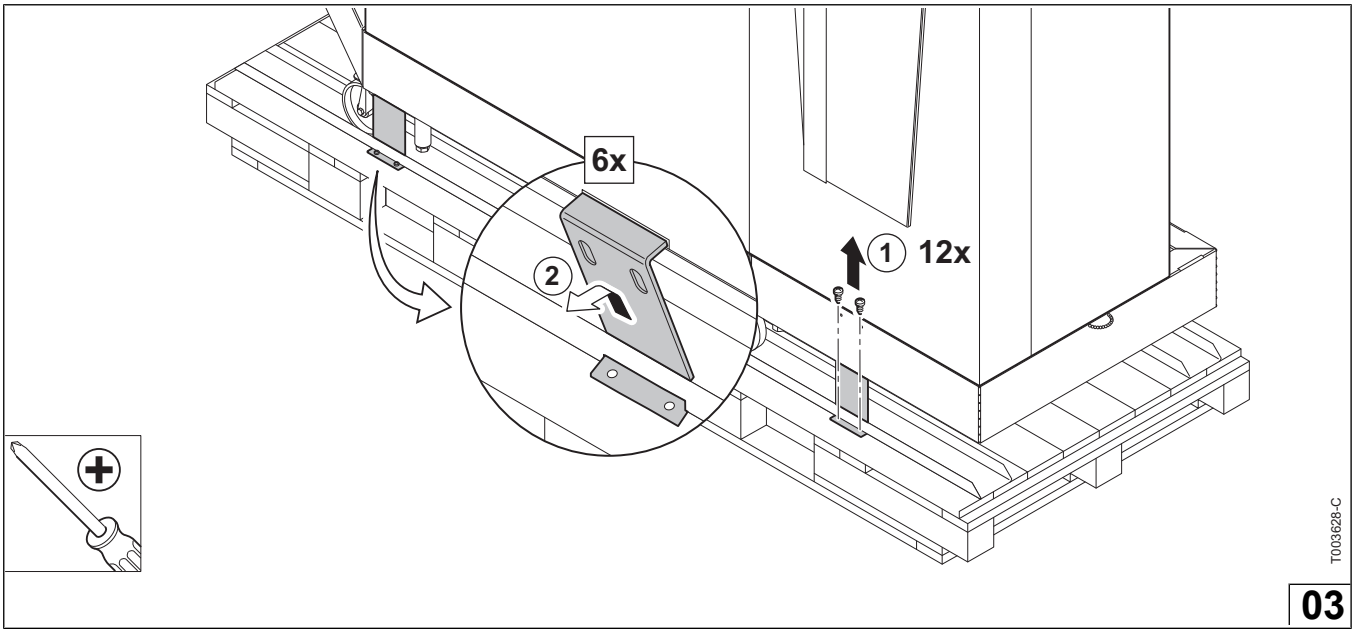
6x
2
1 12x
T003628-C
03

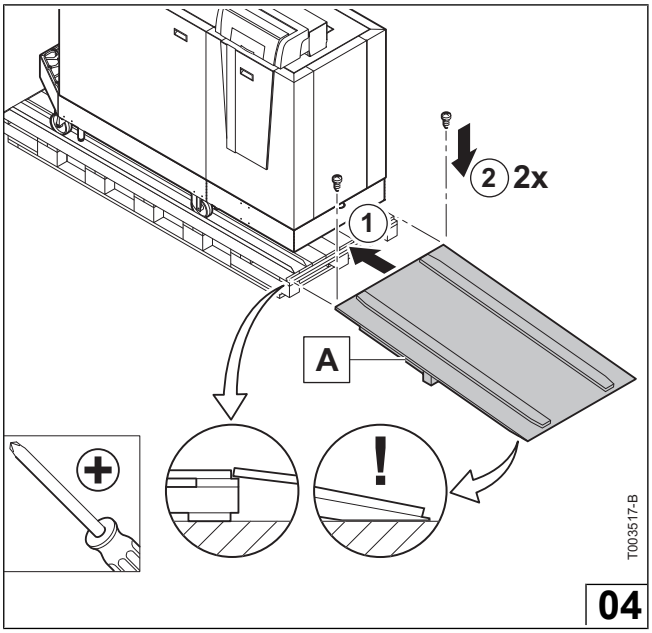
2 2x
1
A
!
T003517-B
04

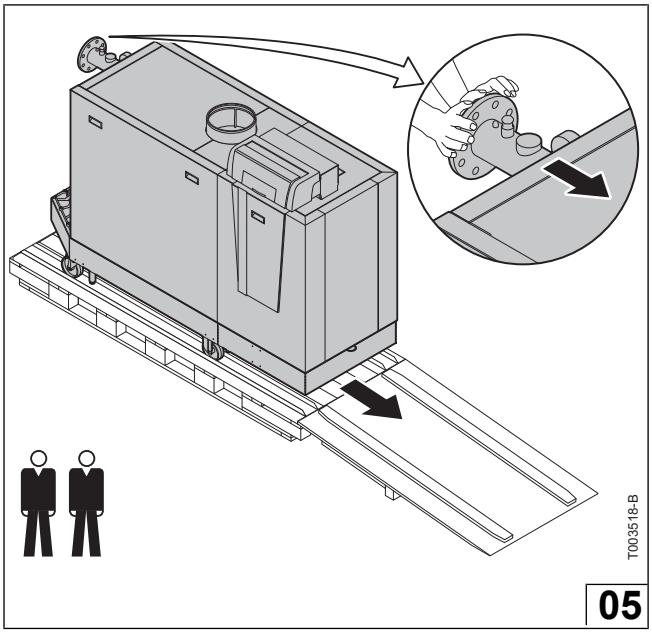
T003518-B
05

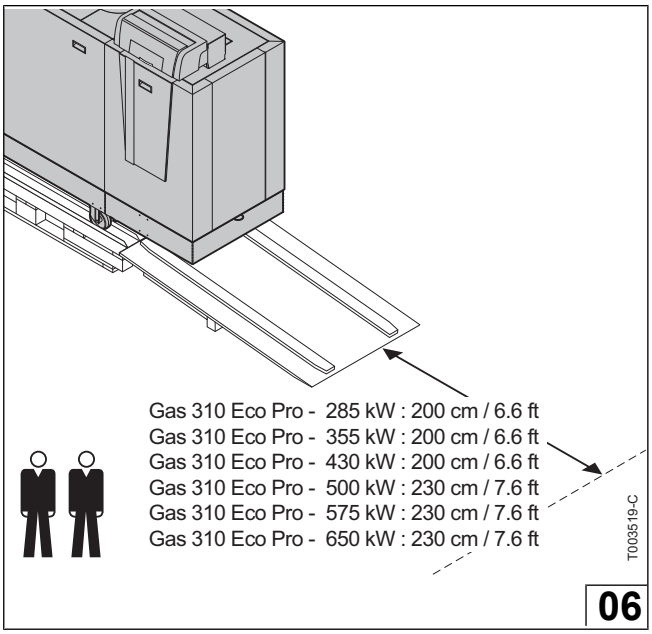
Gas 310 Eco Pro - 285 kW : 200 cm / 6.6 ft
Gas 310 Eco Pro - 355 kW : 200 cm / 6.6 ft
Gas 310 Eco Pro - 430 kW : 200 cm / 6.6 ft
Gas 310 Eco Pro - 500 kW : 230 cm / 7.6 ft
Gas 310 Eco Pro - 575 kW : 230 cm / 7.6 ft
Gas 310 Eco Pro - 650 kW : 230 cm / 7.6 ft
T003519-C
06

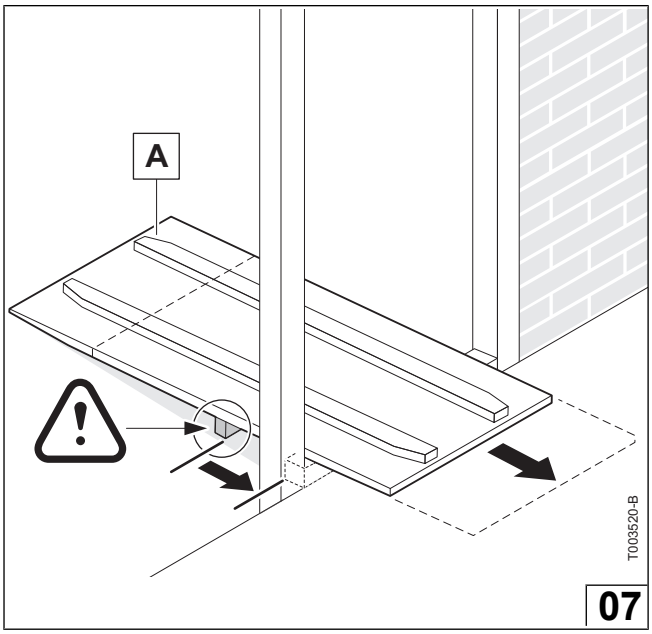
A
T003520-B
07

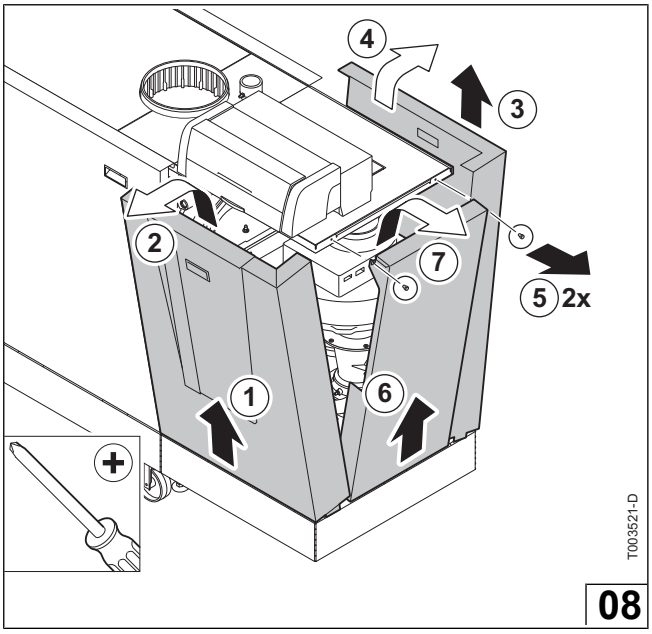
1
2
3
4
5 2x
6
7
T003521-D
08

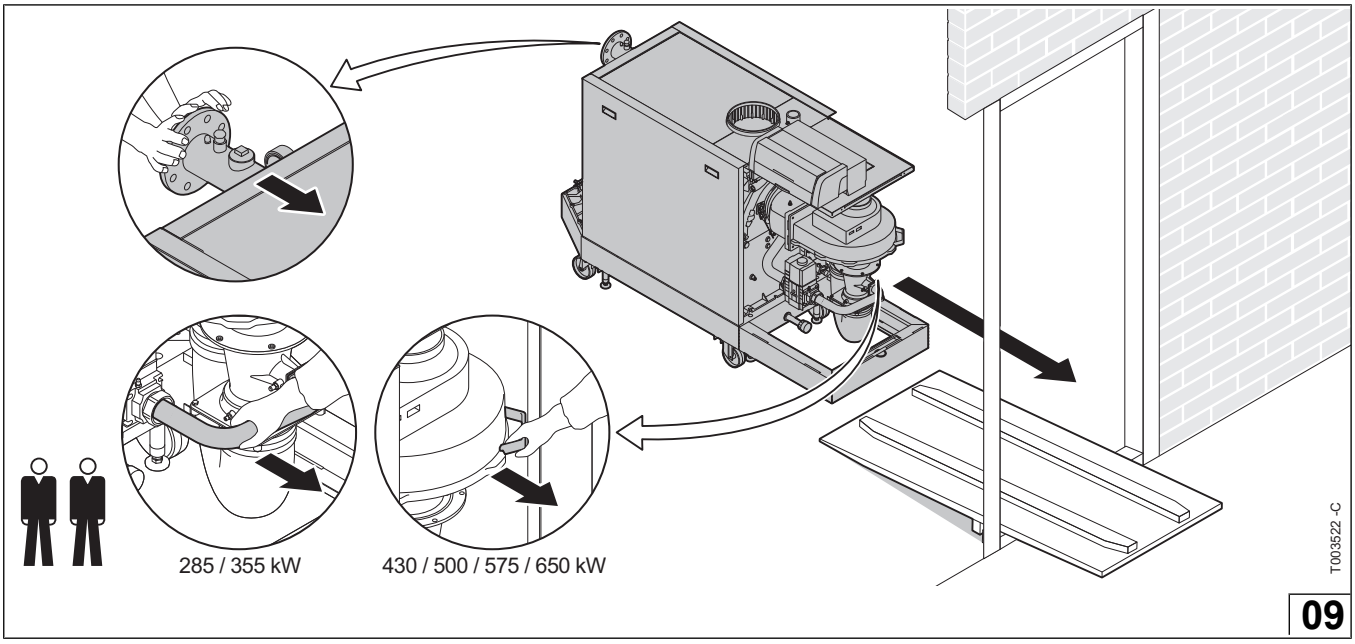
285 / 355 kW
430 / 500 / 575 / 650 kW
T003522 -C
09

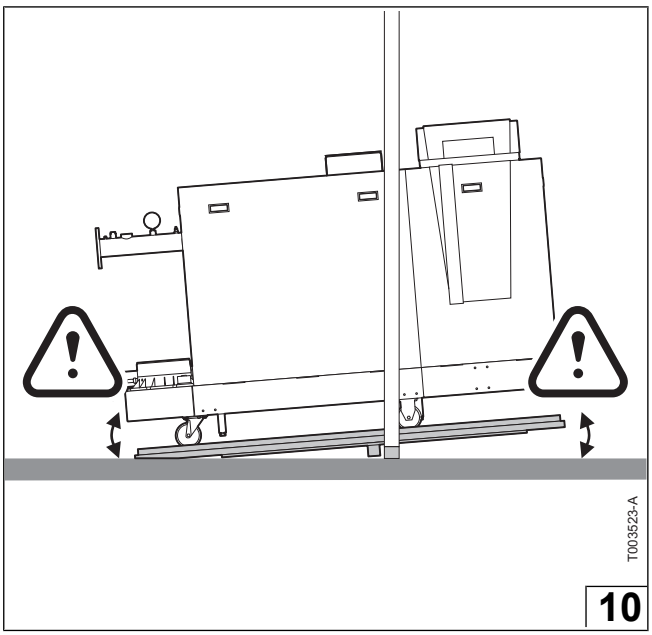


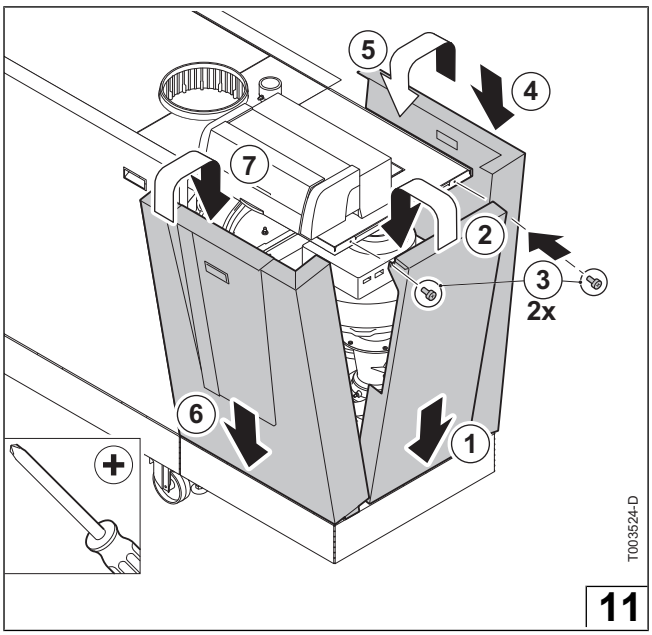


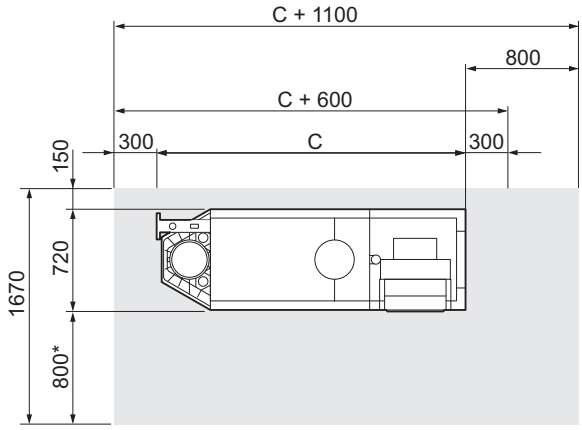


| kW | C (mm) |
|---|---|
| 310-285 kW | 1862 |
| 310-355 kW | 1862 |
| 310-430 kW | 1862 |
| 310-500 kW | 2172 |
| 310-575 kW | 2172 |
| 310-650 kW | 2172 |

T004016-D

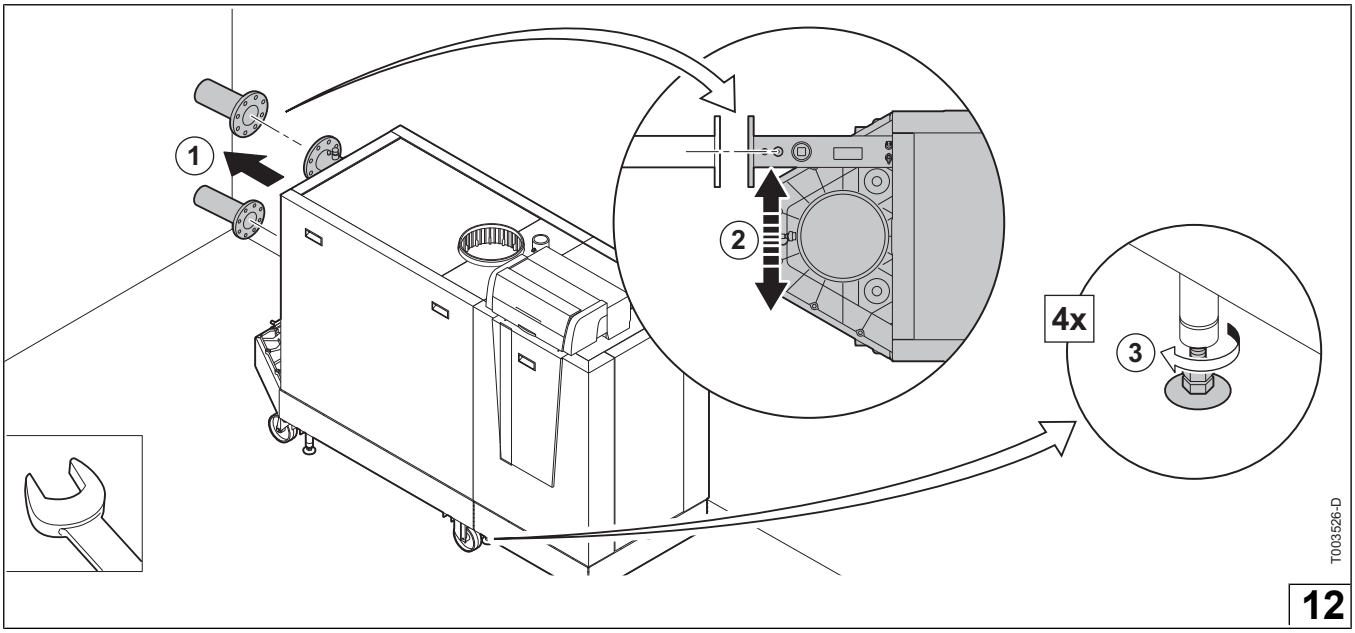

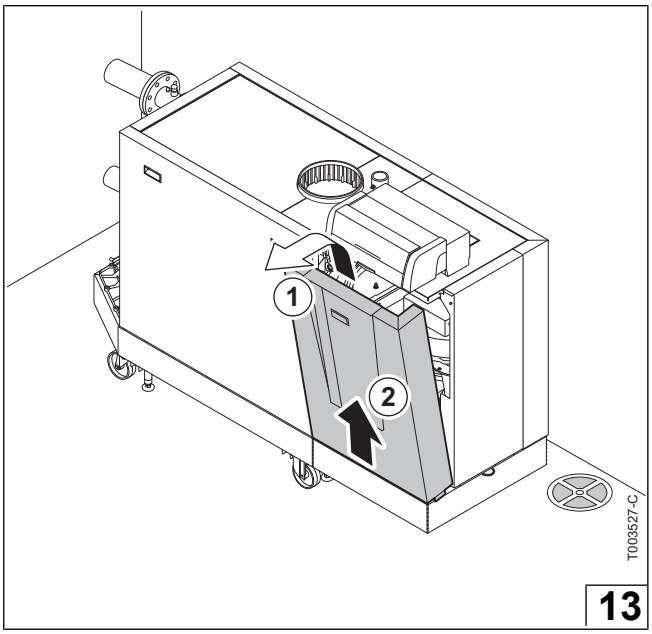


13

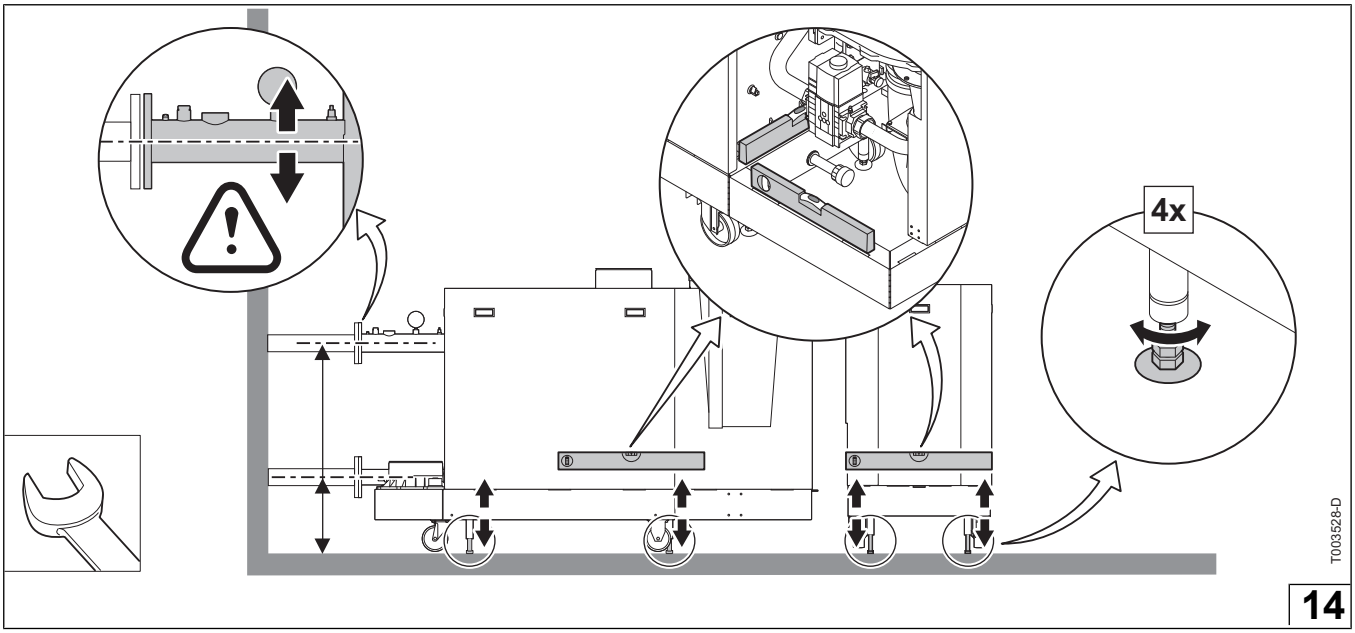


14

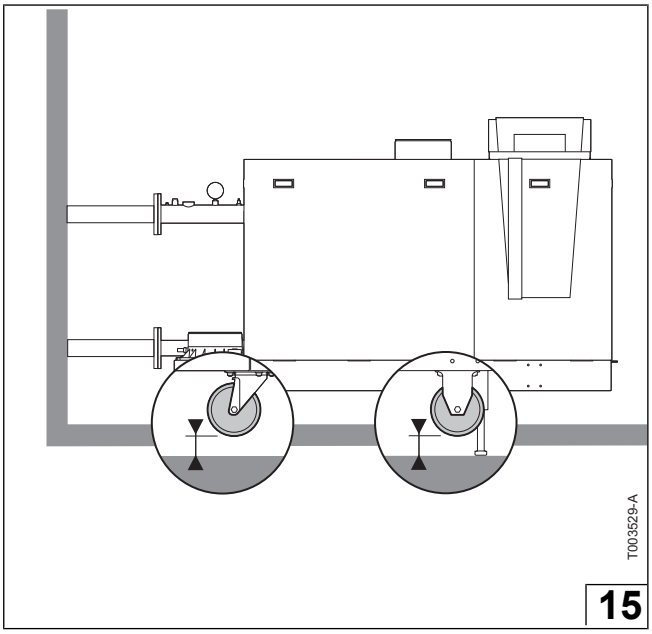


15

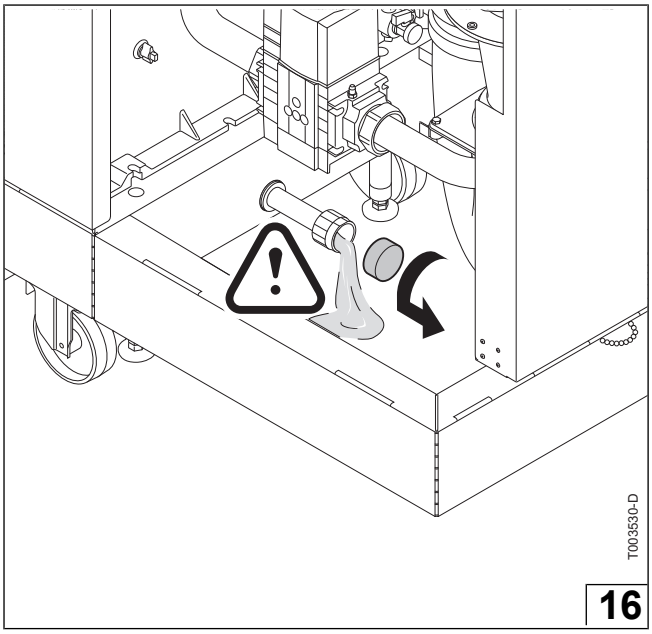


16

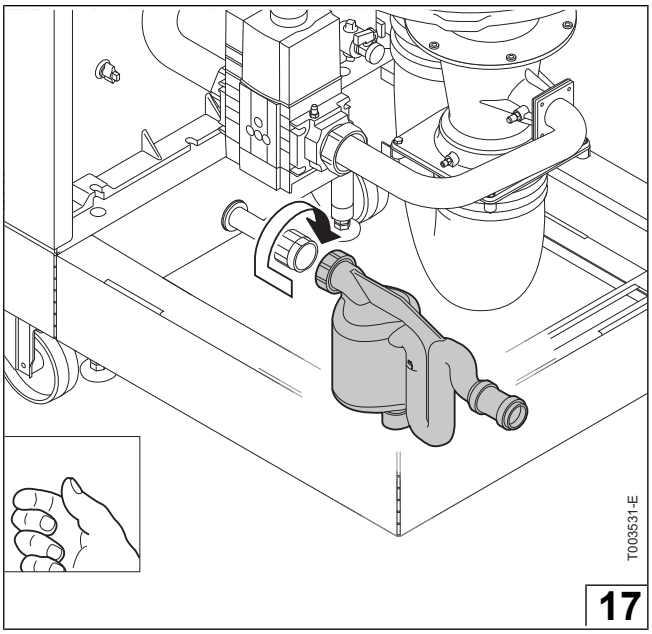
T003531-E
17

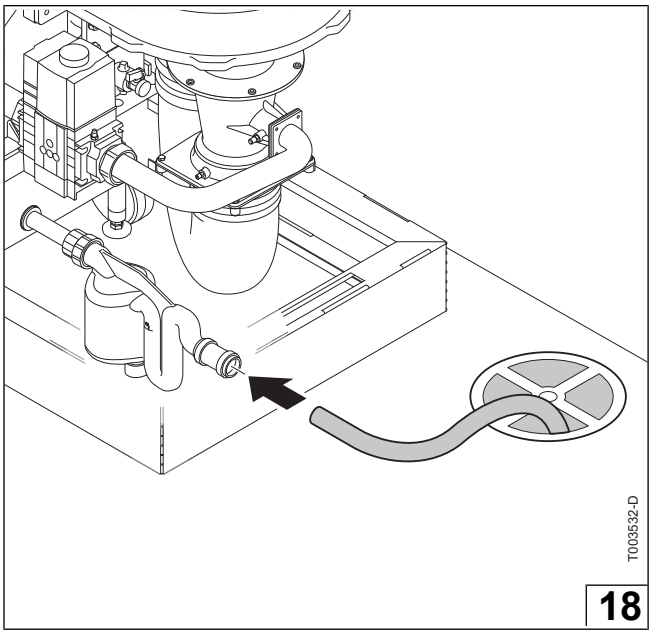
T003532-D
18

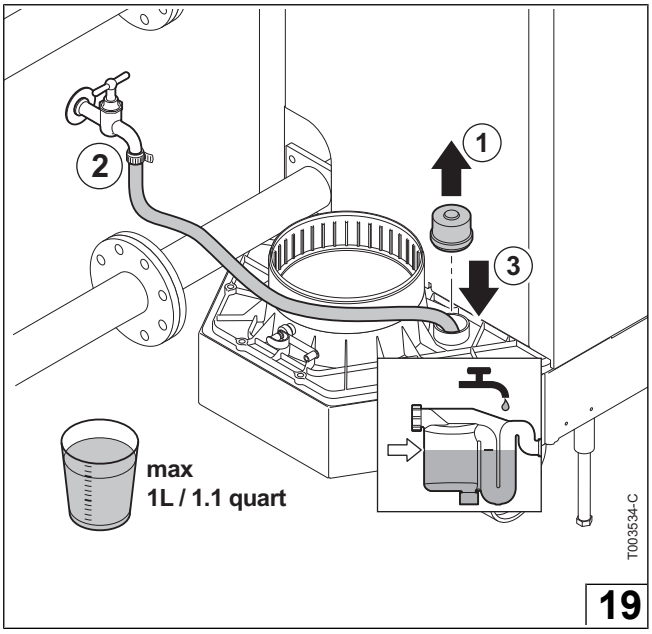
2
1
3
max
1L / 1.1 quart
T003534-C
19

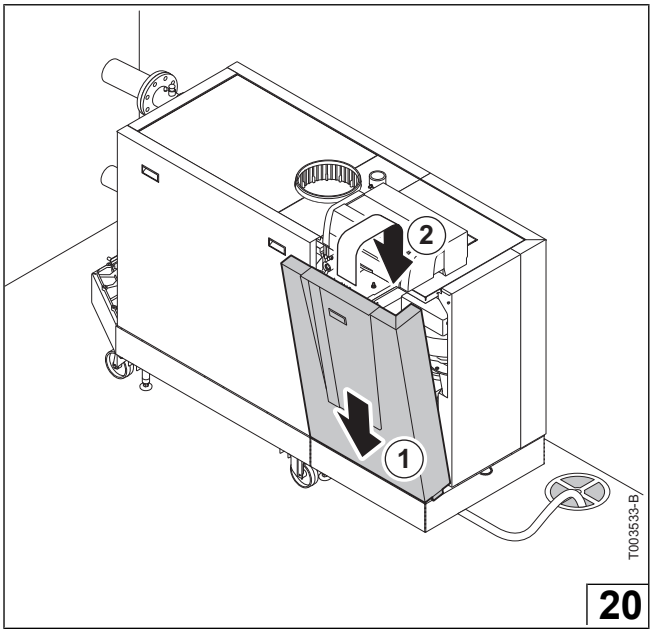
2
1
T003533-B
20

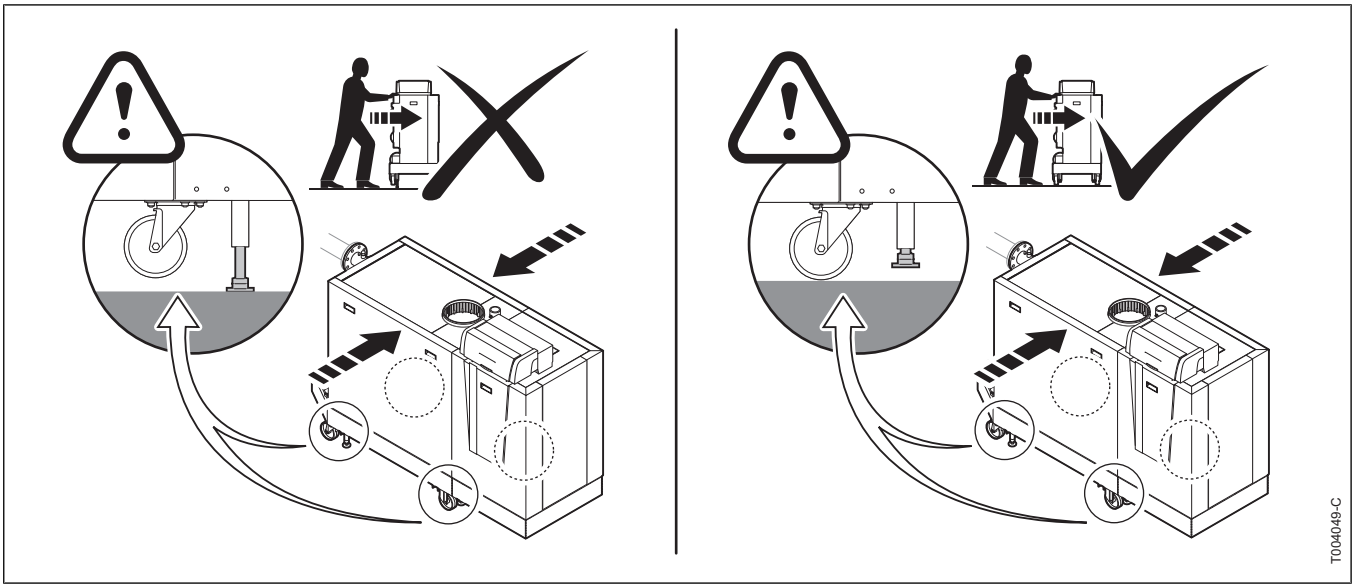
T004049-C

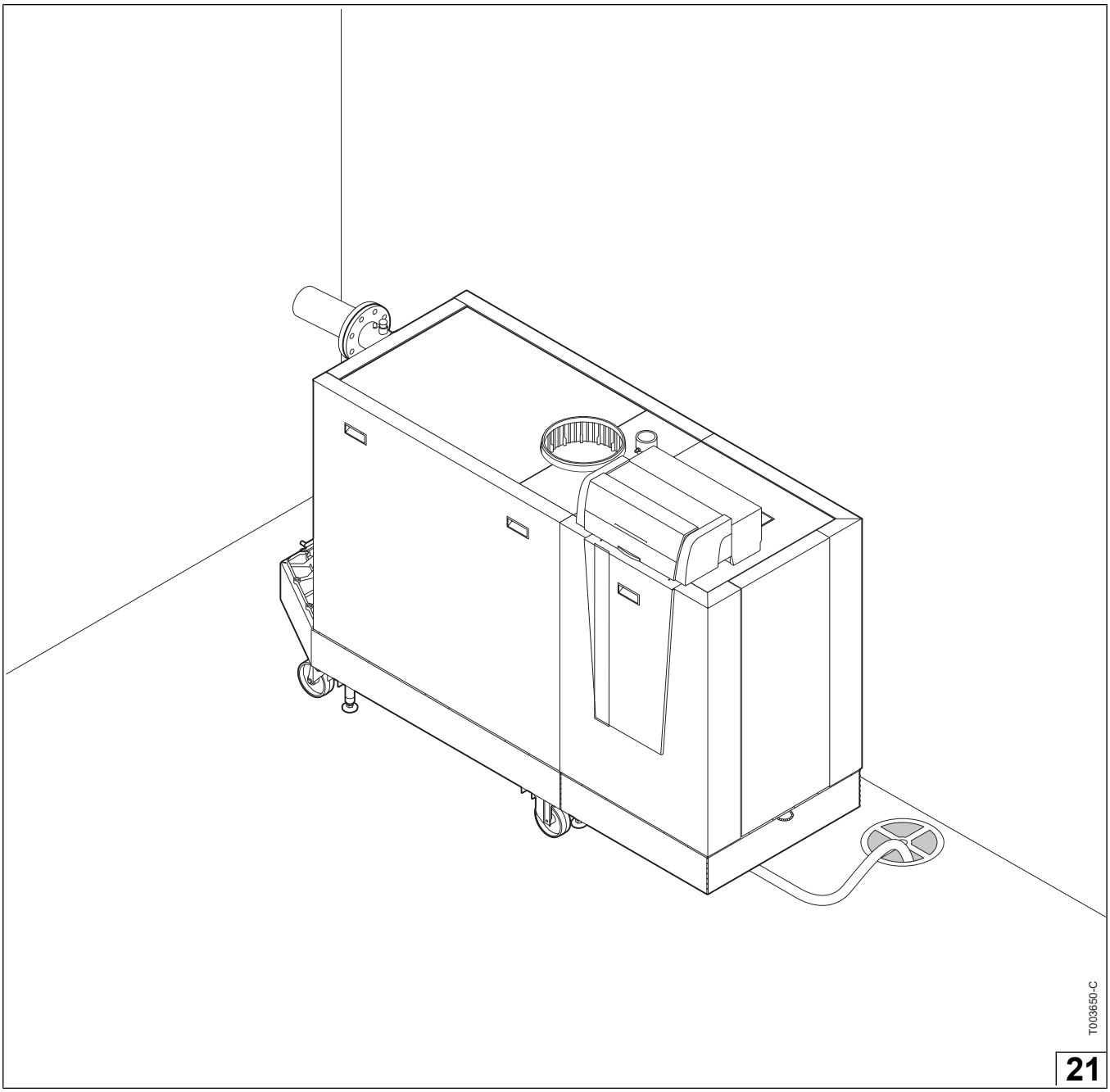
T003650-C
21

**© Copyright**
All technical and technological information contained in these technical instructions, as well as any drawings and technical descriptions supplied, remain our property and shall not be multiplied without our prior consent in writing.

Ours is a policy of continuous development. We reserve the right to alter specifications without prior notification.

Subject to alterations.

125486-010312

125486