Montage instructie
Assembly instructions
Instructions de montage
Montageanweisung
Instrucciones para el montaje
Istruzioni di montaggio

Hijsen / uitpakken / plaatsen
Lifting / unpacking / positioning
Hisser / déballer / positionnner
Heben / auspacken/ aufstellen
Elevación / desembalaje / posicionamiento
Sollevamento / spacchettamento / posizionamento

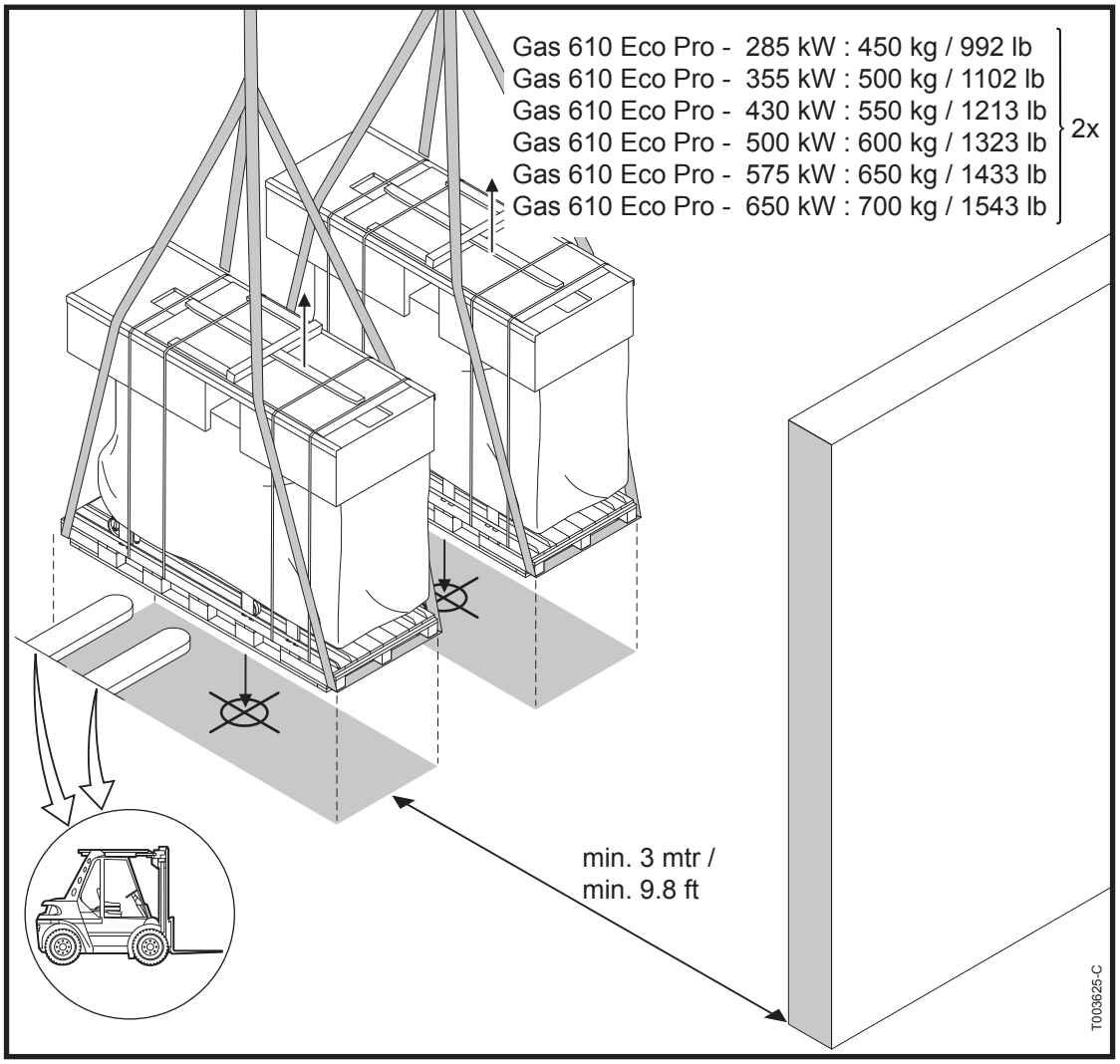

Warning
Before installing, first read the installation & operating manual.

Attention
Avant installer, lisez la notice installation et d'utilisation.

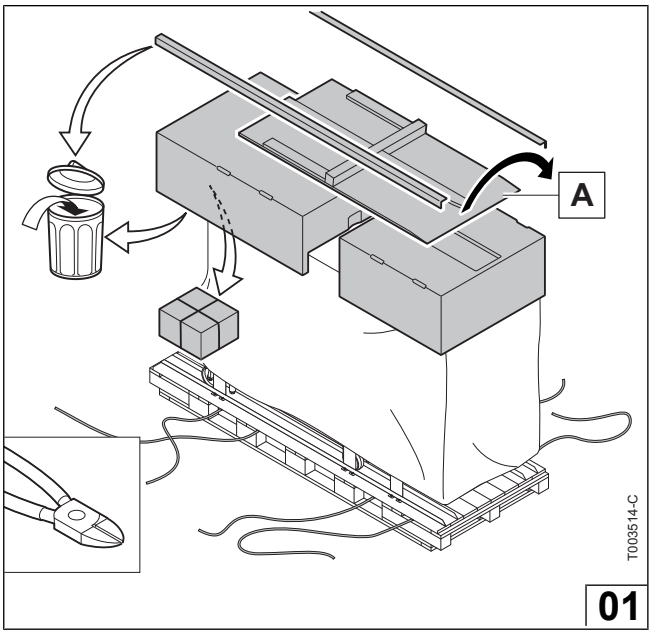
A
T003514-C
01

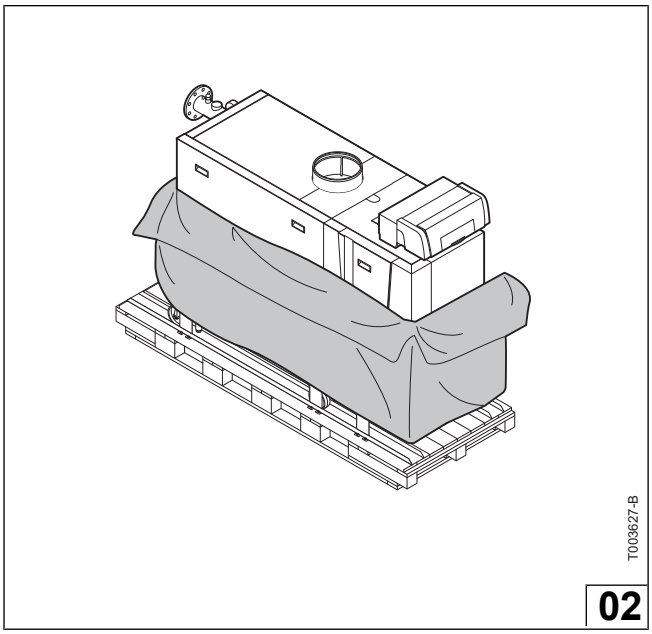
T003627-B
02

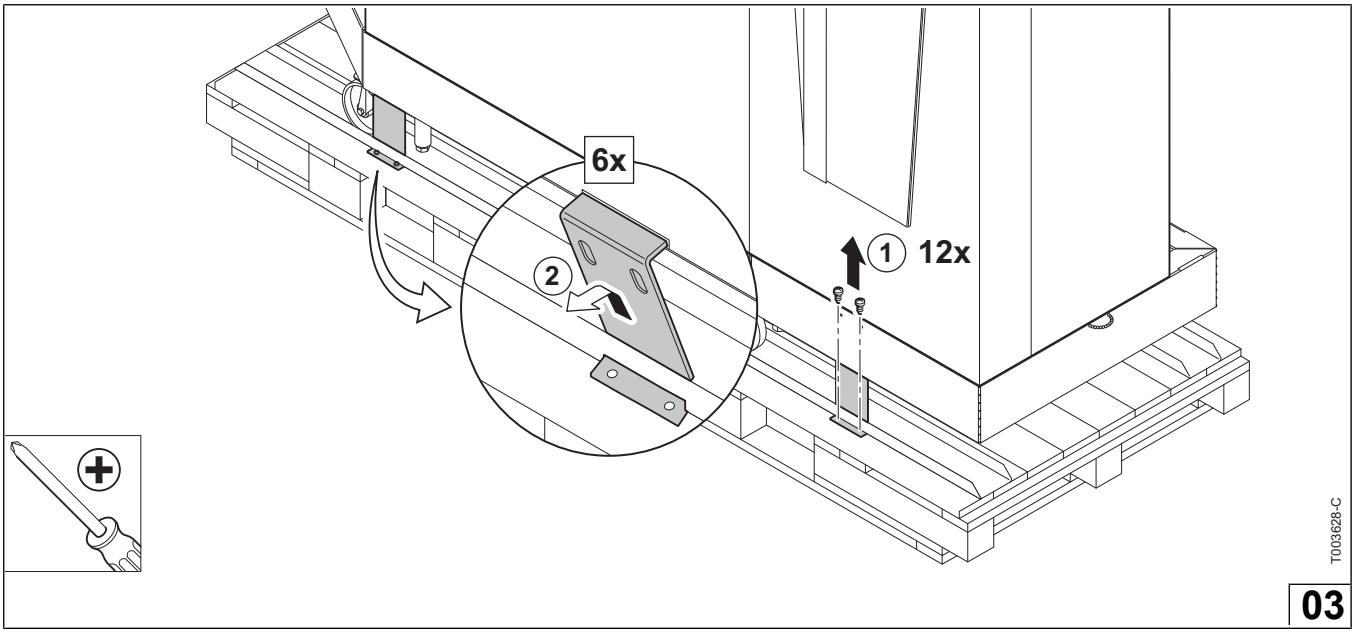
6x
2
1 12x
T003628-C
03

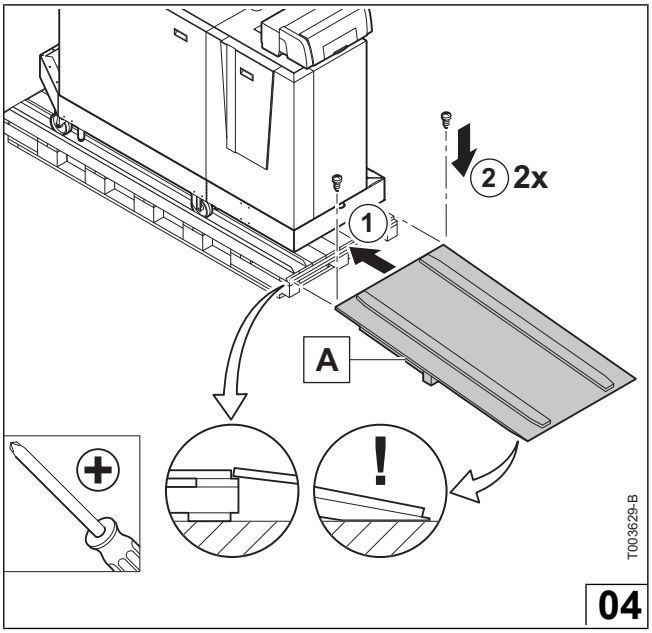
2 2x
1
A
!
T003629-B
04

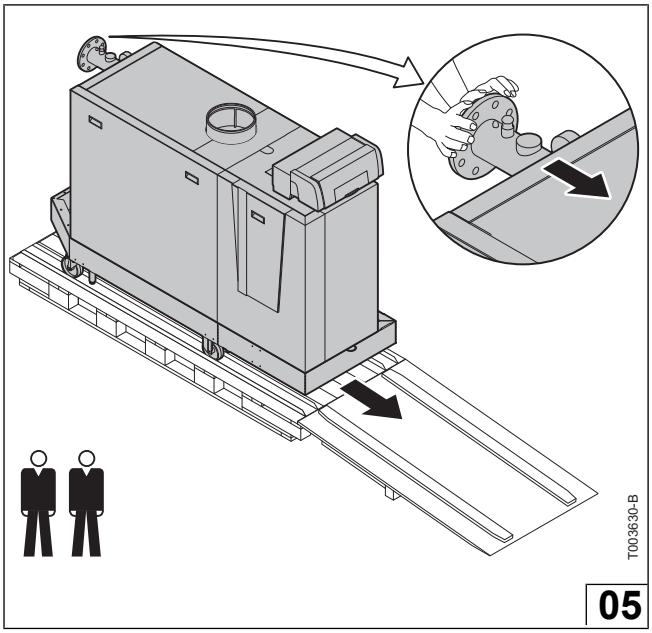
T003630-B
05

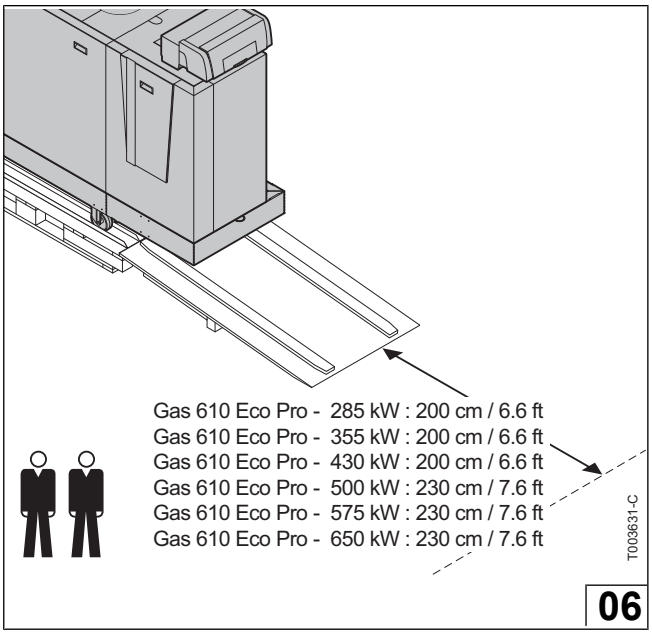
Gas 610 Eco Pro - 285 kW : 200 cm / 6.6 ft
Gas 610 Eco Pro - 355 kW : 200 cm / 6.6 ft
Gas 610 Eco Pro - 430 kW : 200 cm / 6.6 ft
Gas 610 Eco Pro - 500 kW : 230 cm / 7.6 ft
Gas 610 Eco Pro - 575 kW : 230 cm / 7.6 ft
Gas 610 Eco Pro - 650 kW : 230 cm / 7.6 ft
T003631-C
06

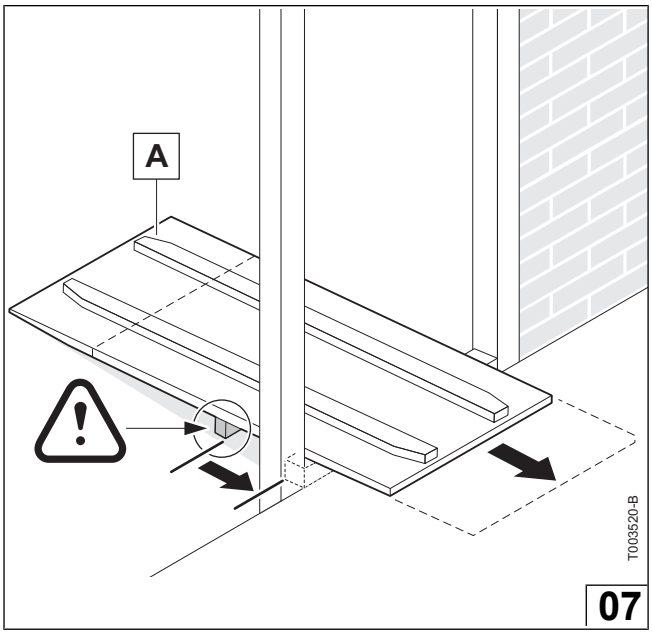
A
T003520-B
07

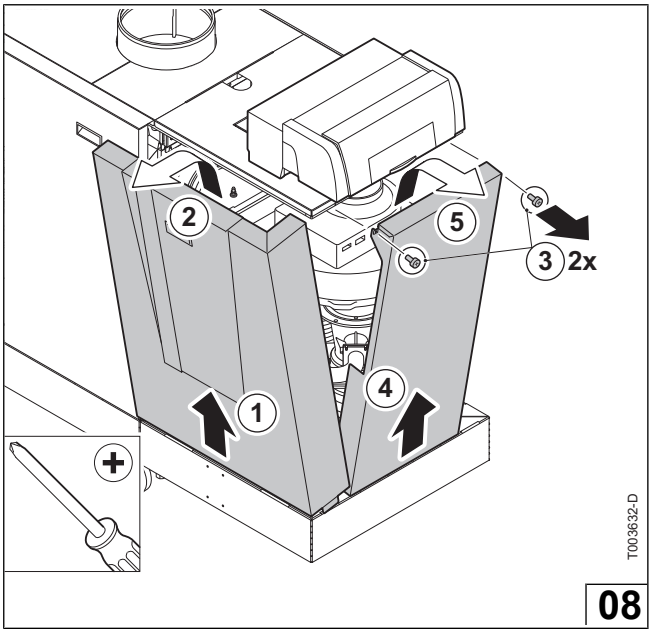
2
5
3 2x
1
4
T003632-D
08

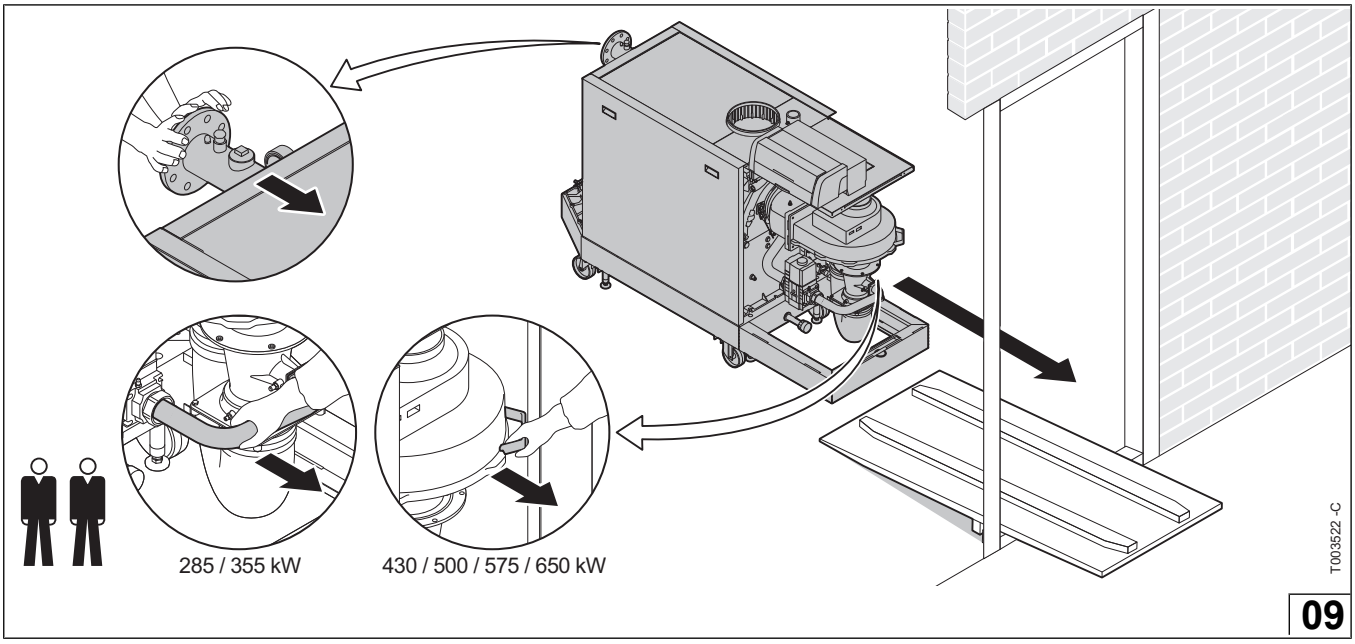
285 / 355 kW
430 / 500 / 575 / 650 kW
T003522 -C
09

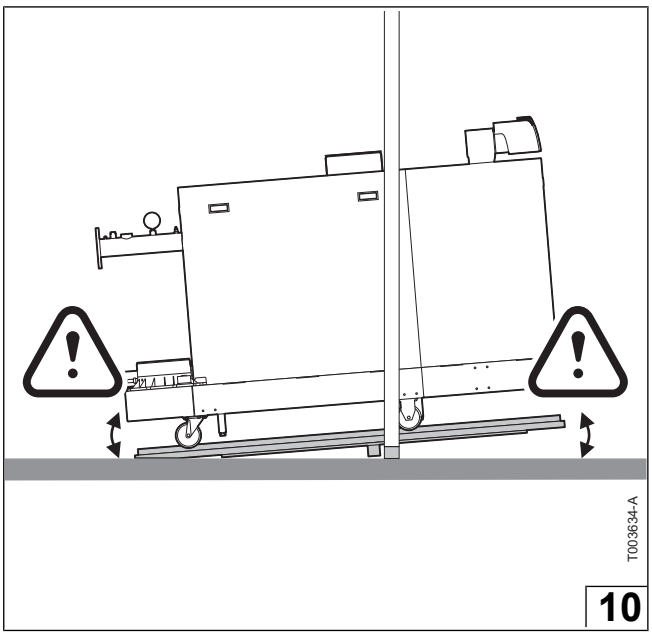

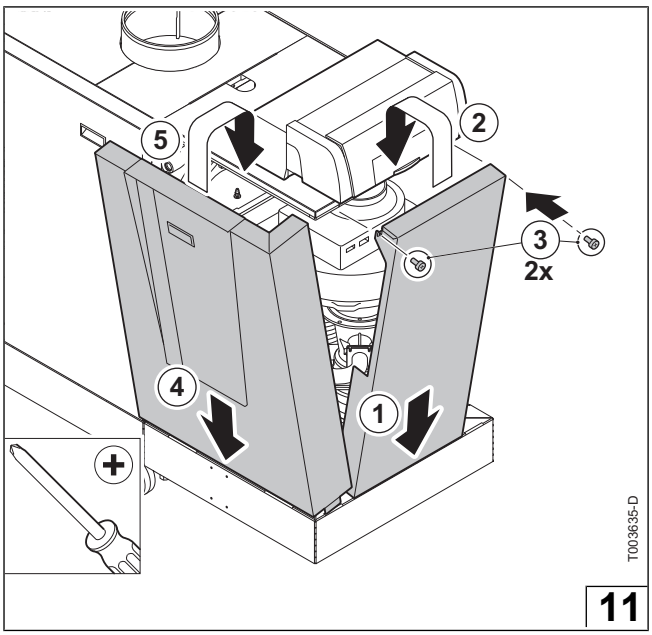

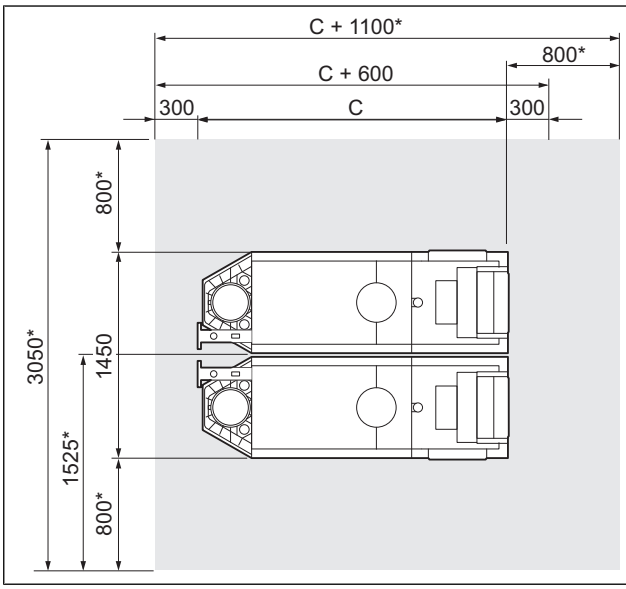

kW	C (mm)
610-570 kW	1862
610-710 kW	1862
610-860 kW	1862
610-1000 kW	2172
610-1150 kW	2172
610-1300 kW	2172

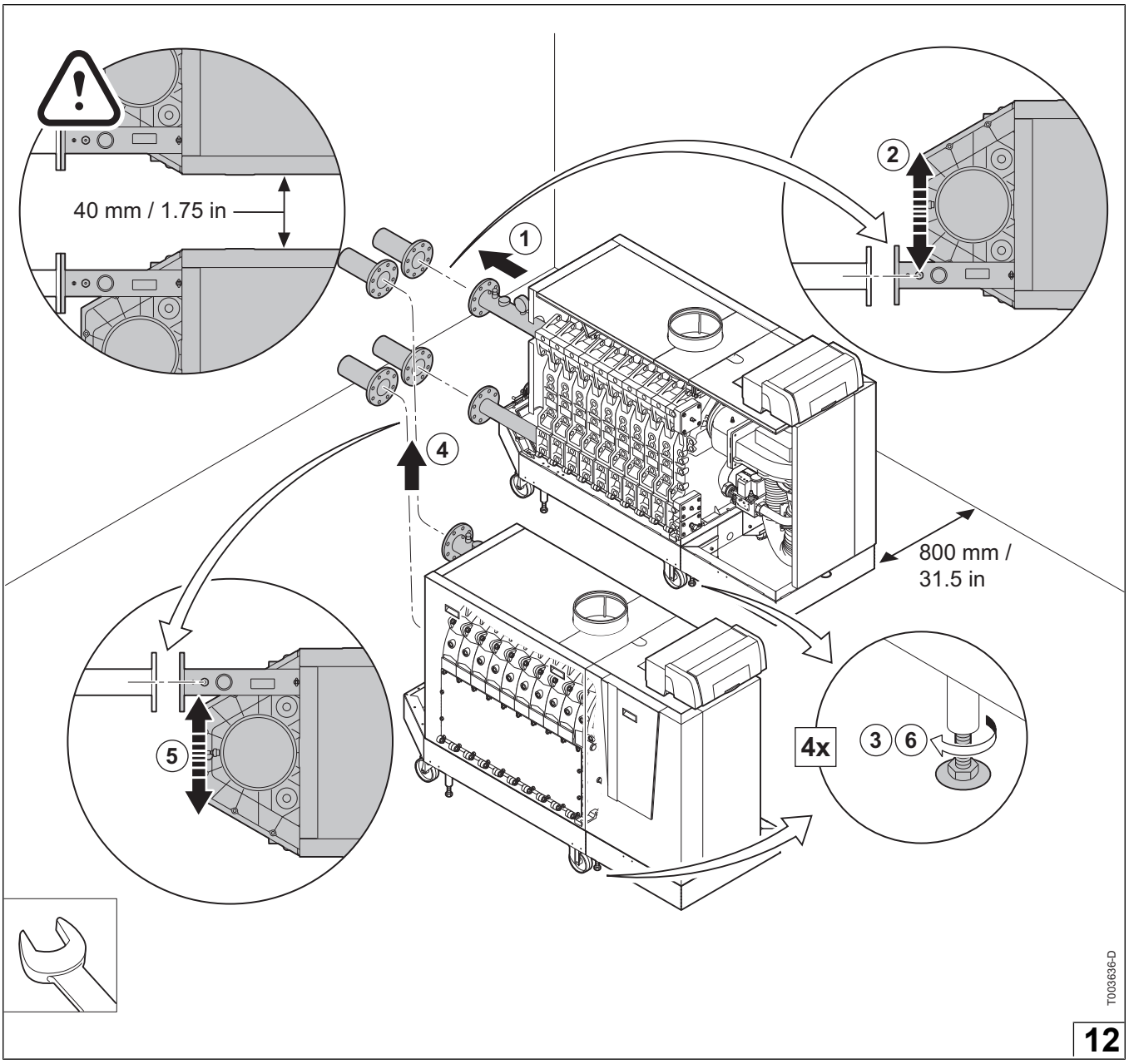
40 mm / 1.75 in
1
2
4
5
800 mm /
31.5 in
4x
3
6
T003636-D
12

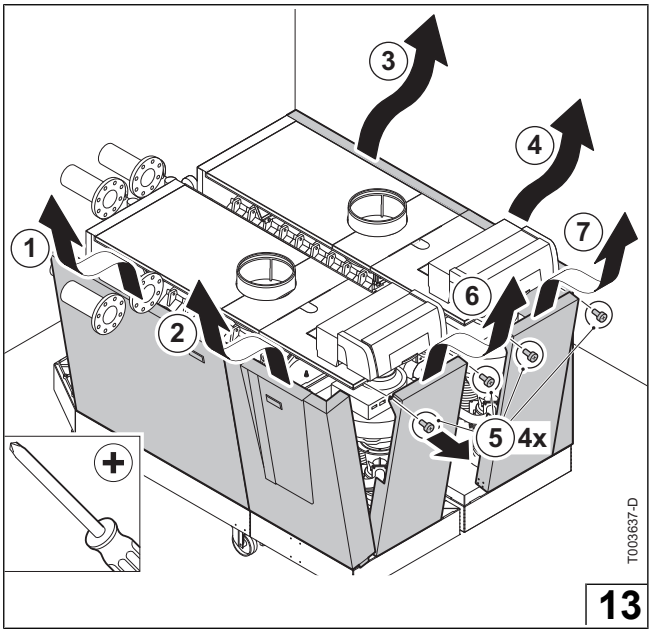
3
4
1
7
6
2
5
4x
T003637-D
13

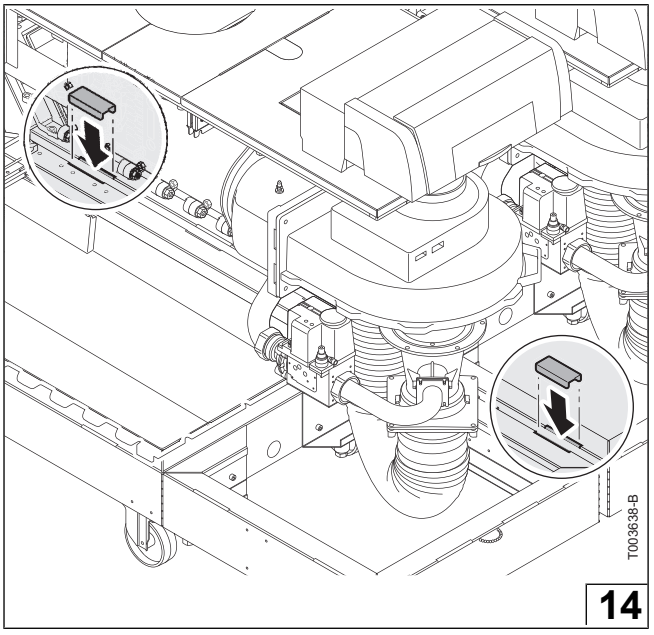
T003638-B
14

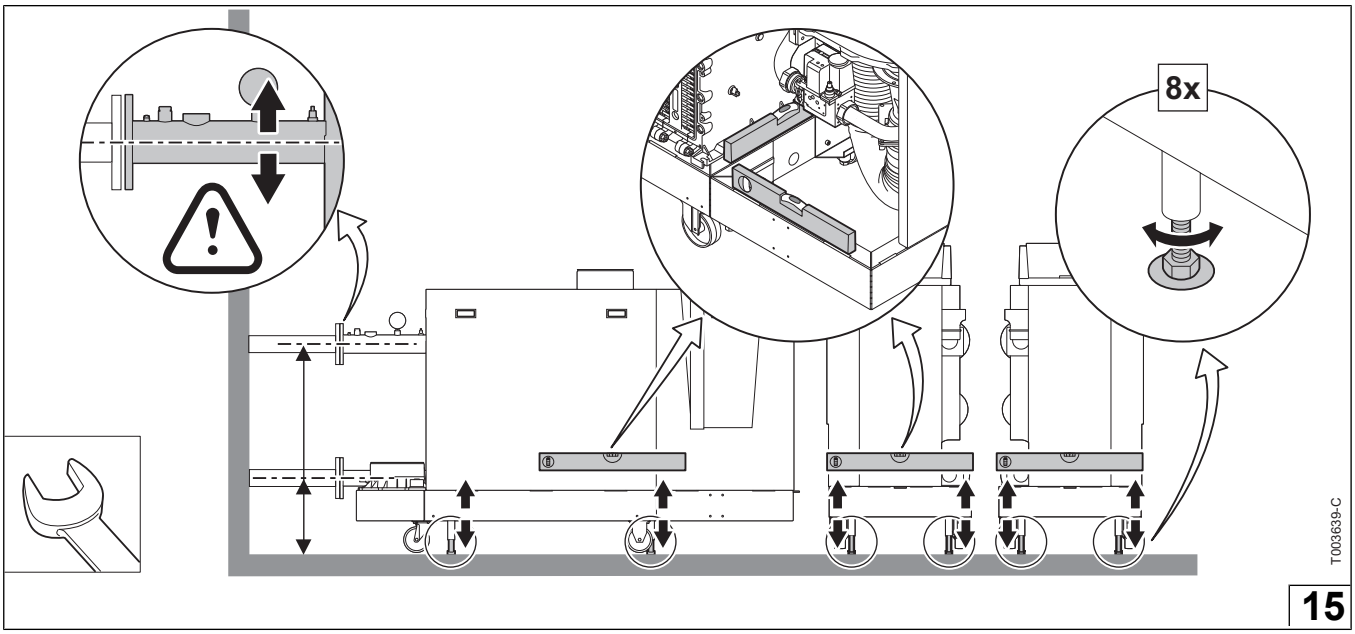
8x
T003639-C
15

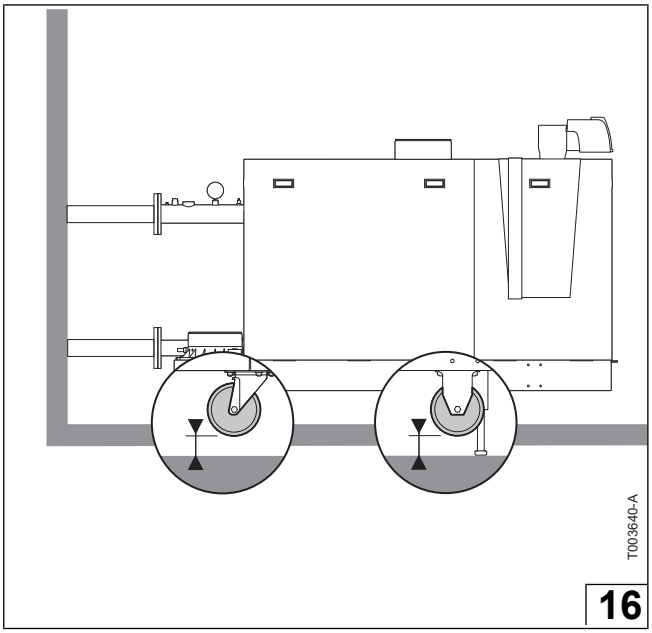
T003640-A
16

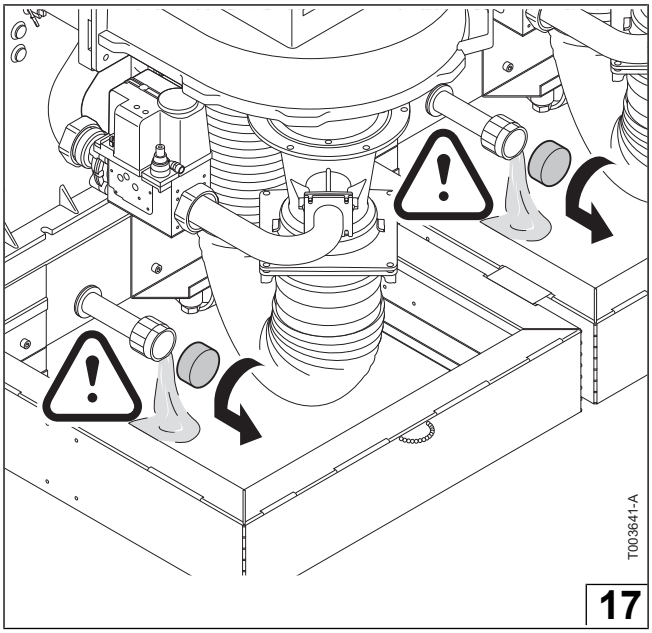
T003641-A
17

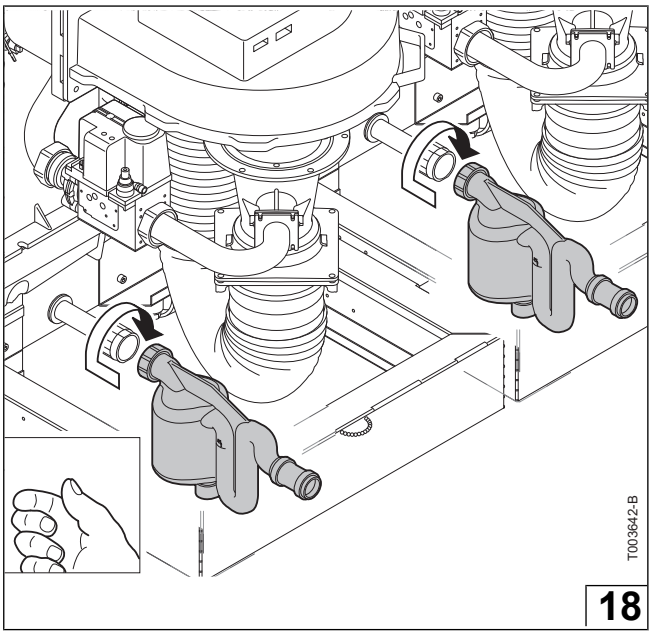
T003642-B
18

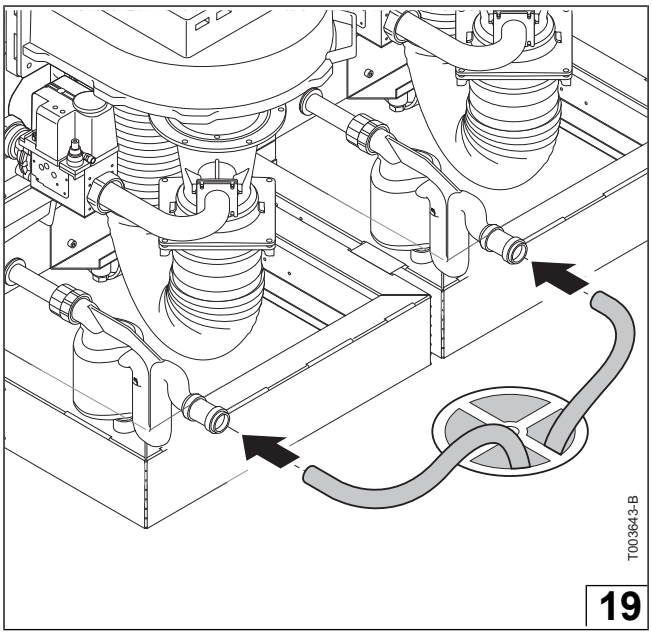
T003643-B
19

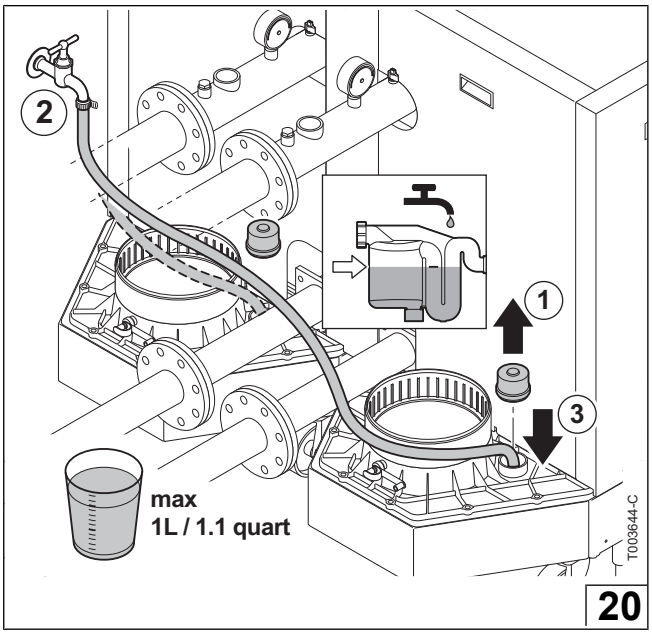
2
1
3
max
1L / 1.1 quart
T003644-C
20

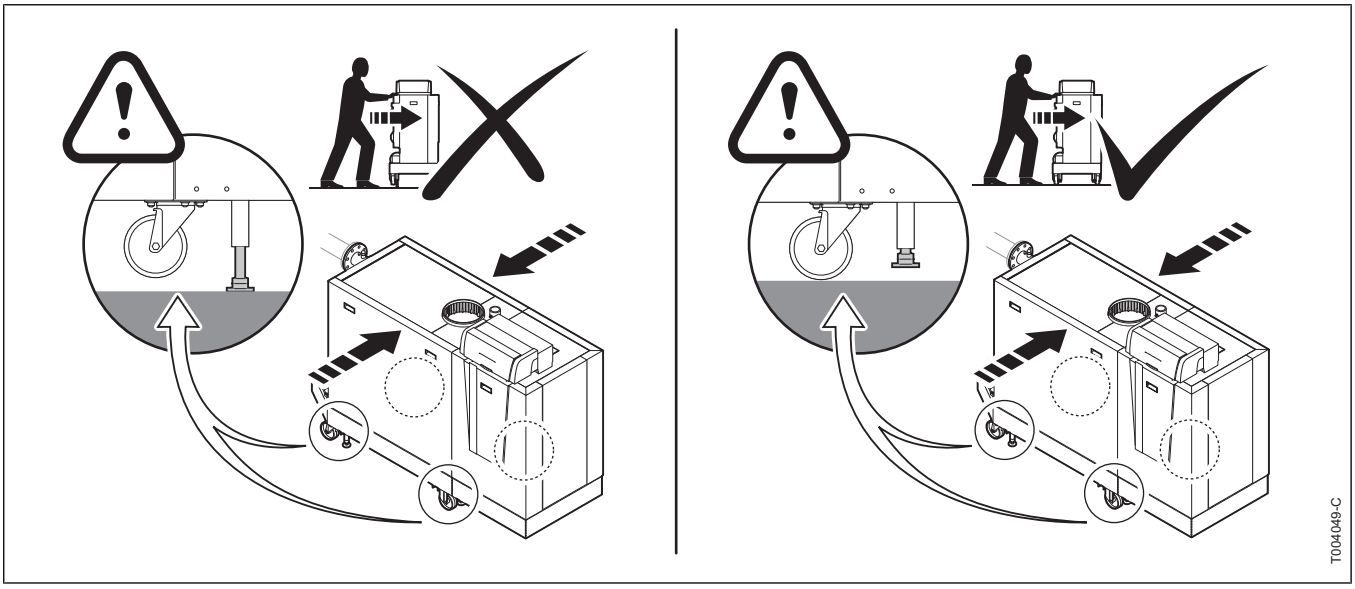
T004049-C

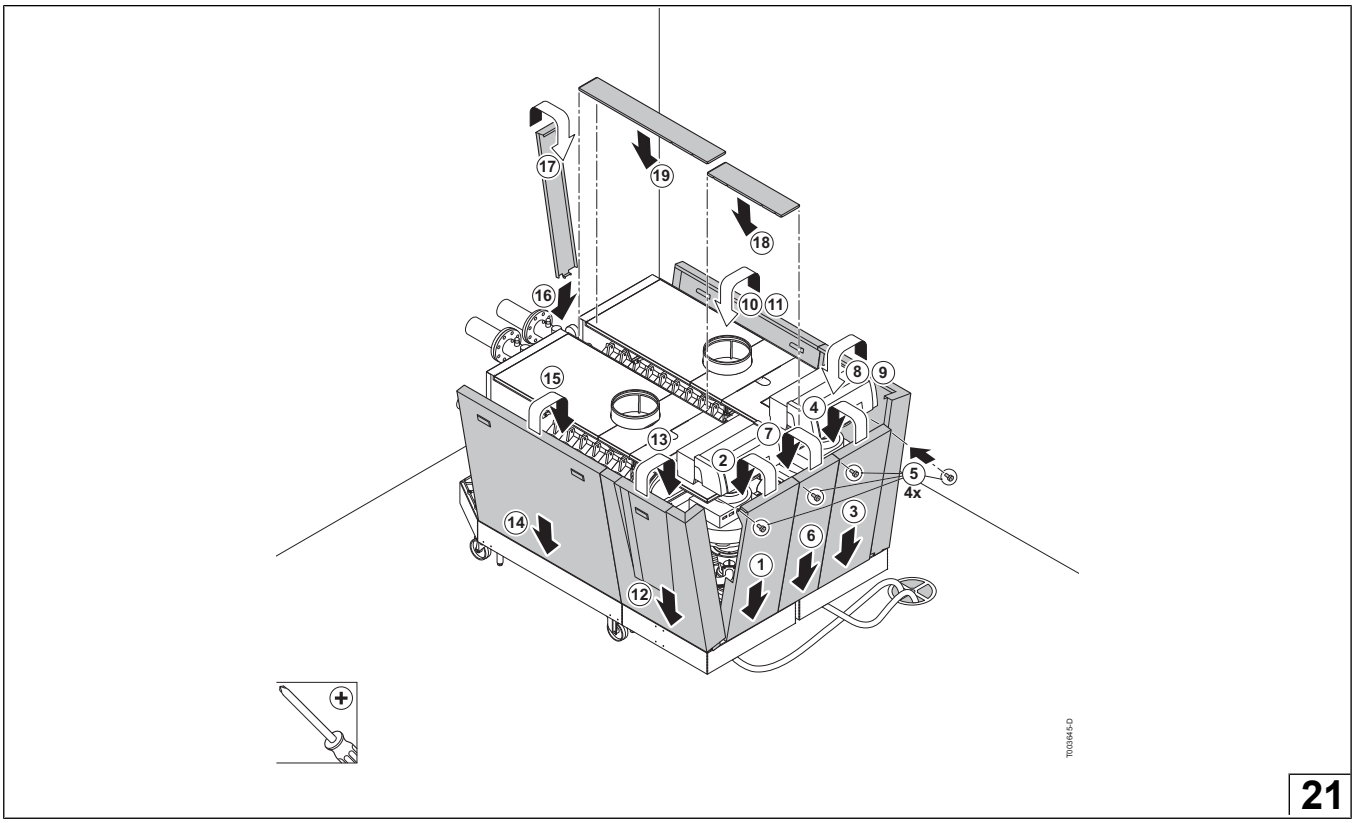
17
19
18
16
10
11
15
8
9
4
13
7
2
5
4x
14
3
6
1
12
T003645-D

21

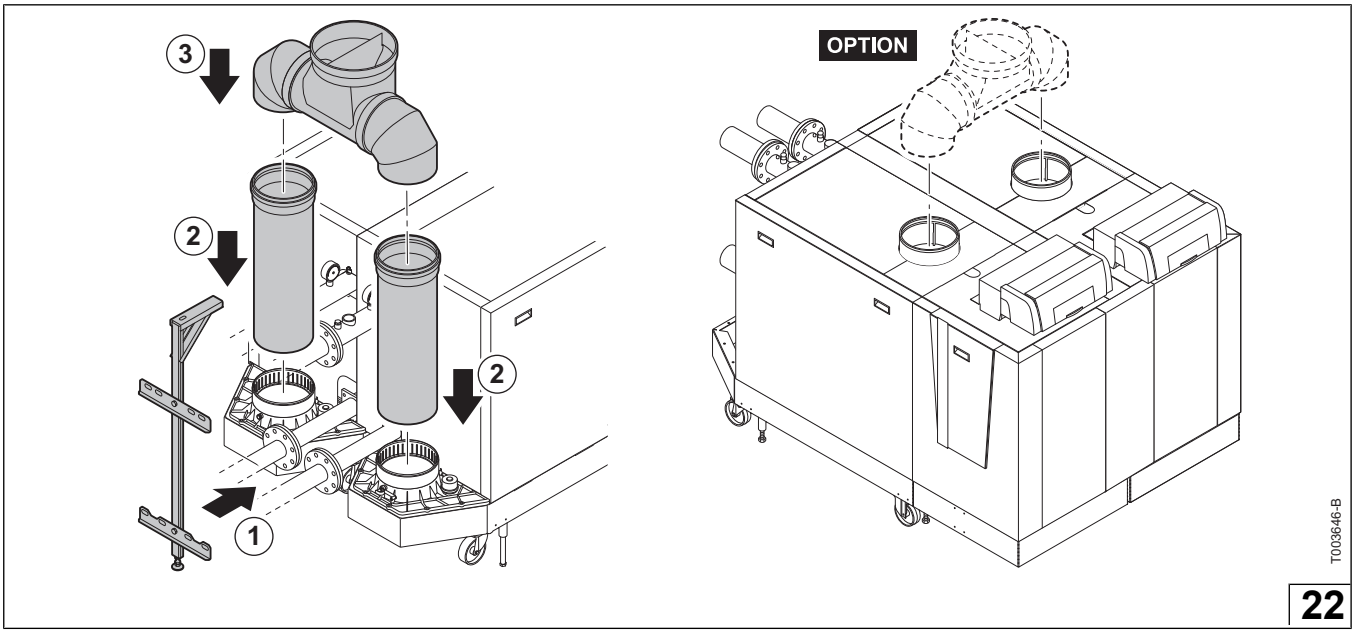
3
2
2
1
OPTION
T003646-B

22

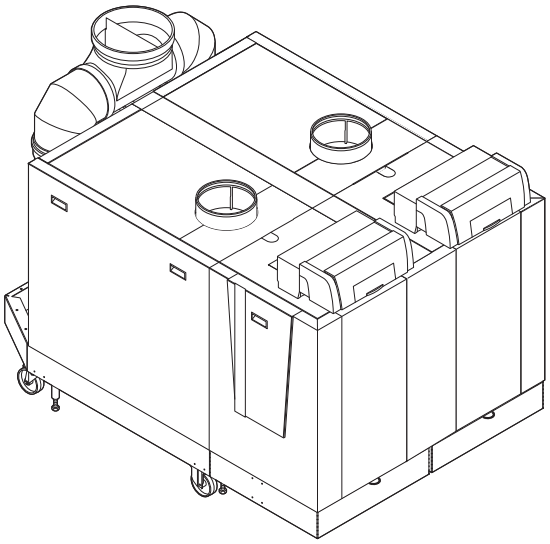

T030947-B

23

© Copyright
All technical and technological information contained in these technical instructions, as well as any drawings and technical descriptions supplied, remain our property and shall not be multiplied without our prior consent in writing.

Ours is a policy of continuous development. We reserve the right to alter specifications without prior notification.

Subject to alterations.

126817-010312

126817