nl en fr de es it

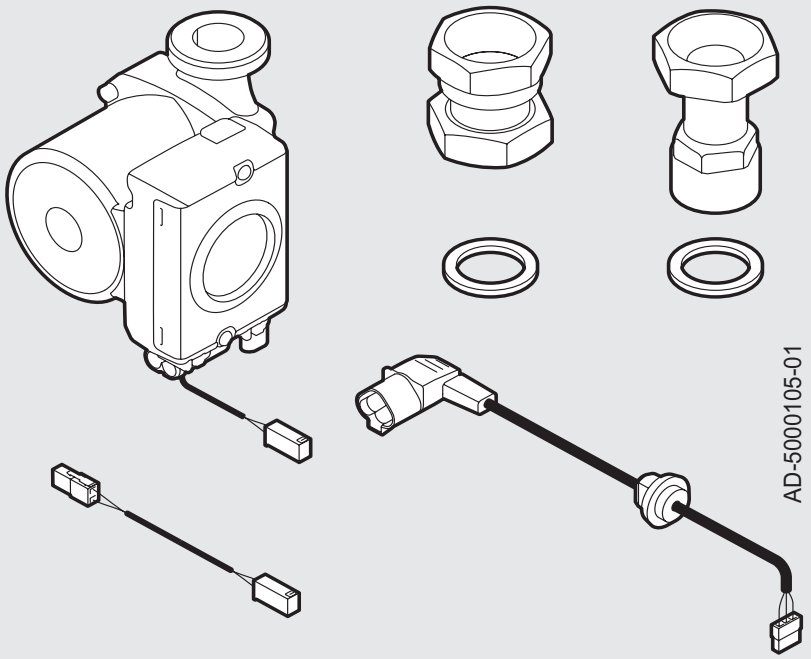

Montage instructie
Assembly instructions
Instructions de montage
Montageanweisung
Instrucciones para el montaje
Istruzioni di montaggio

Pomp Grundfos UPS 25/80
Pump Grundfos UPS 25/80
Pompe Grundfos UPS 25/80
Pumpe Grundfos UPS 25/80
Bomba Grundfos UPS 25/80
Pompa Grundfos UPS 25/80

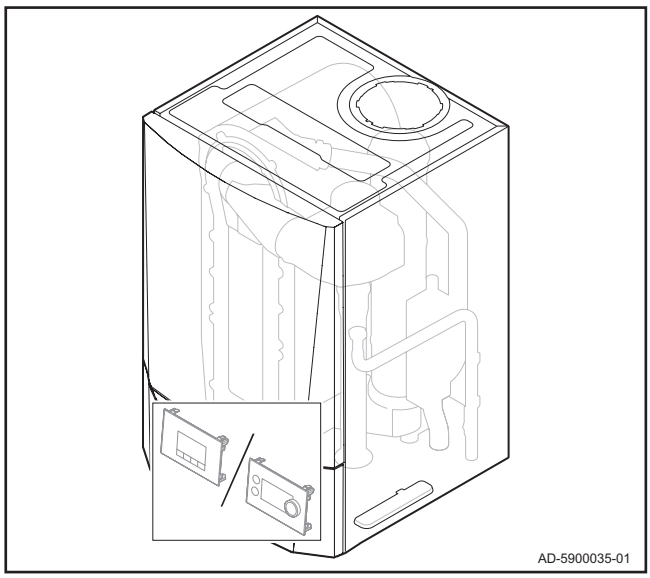

Inhoud verpakking - Set contents - Contenu du kit
Inhalt des Bauzatzes - Contenido del paquete - Contenuti del pacchetto

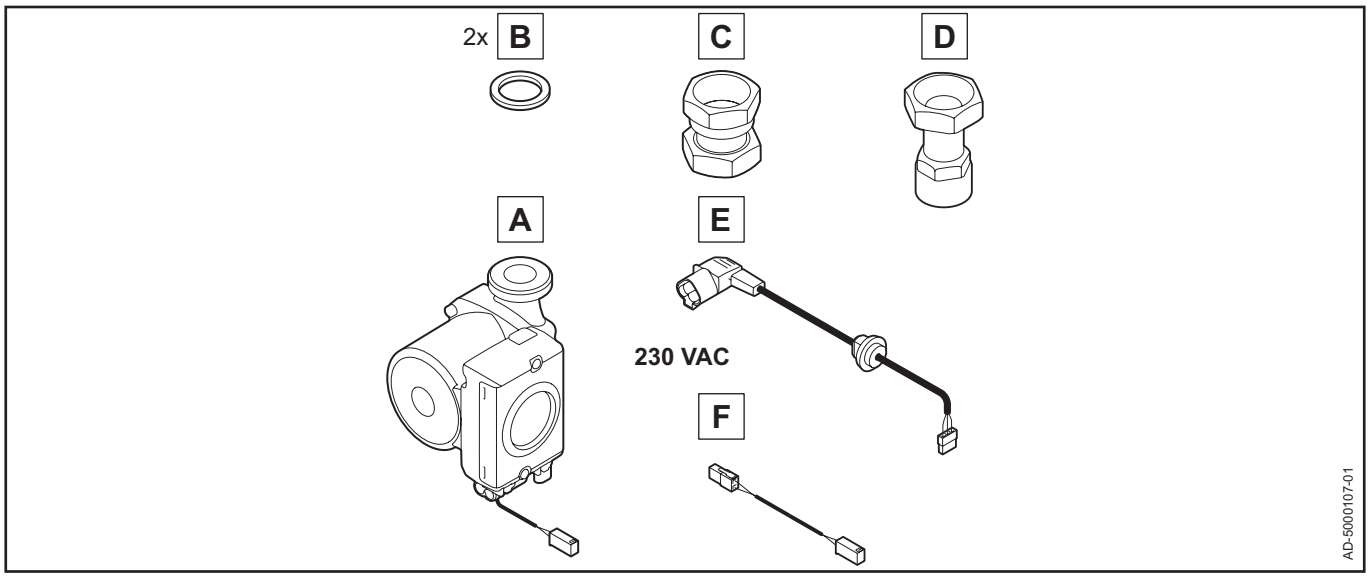

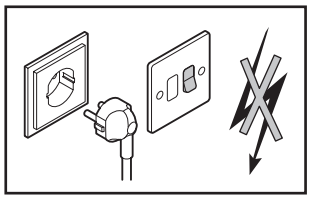

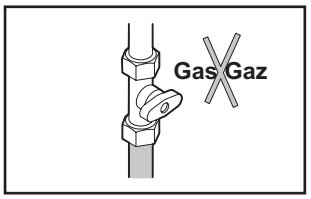



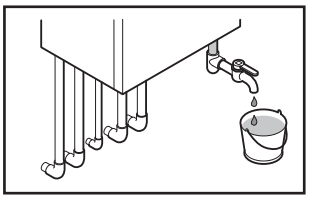

1

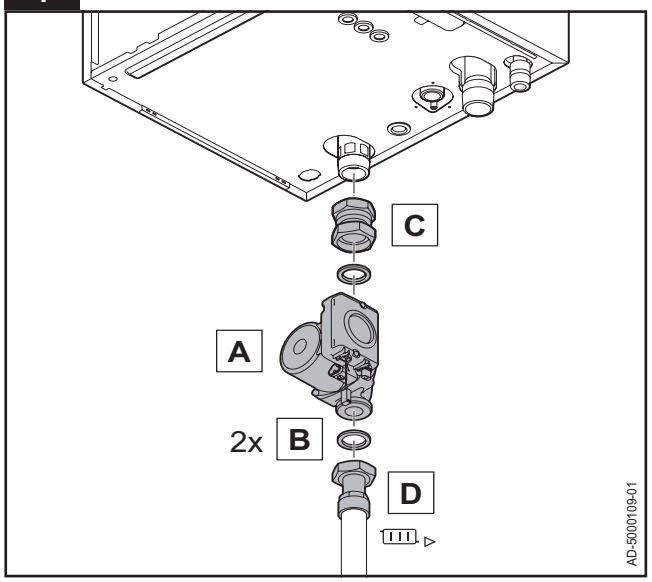
C
A
2x B
D
AD-5000109-01

2

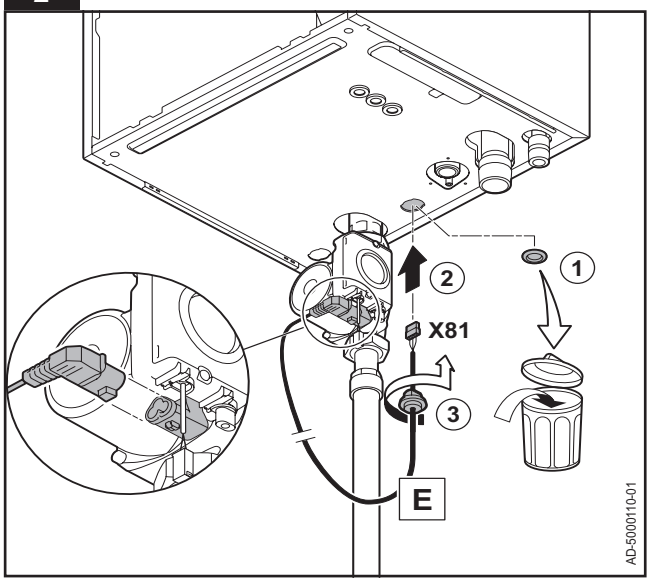
1
2
X81
3
E
AD-5000110-01

3

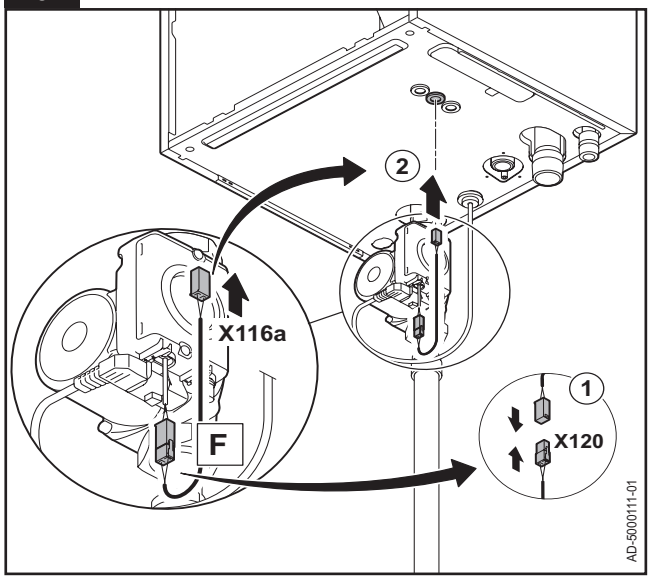
2
X116a
F
1
X120
AD-5000111-01

4

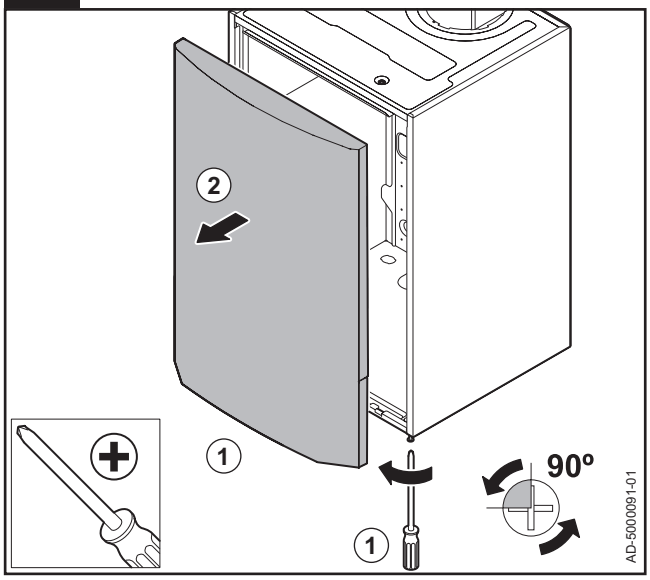
2
1
1
90º
AD-5000091-01

5

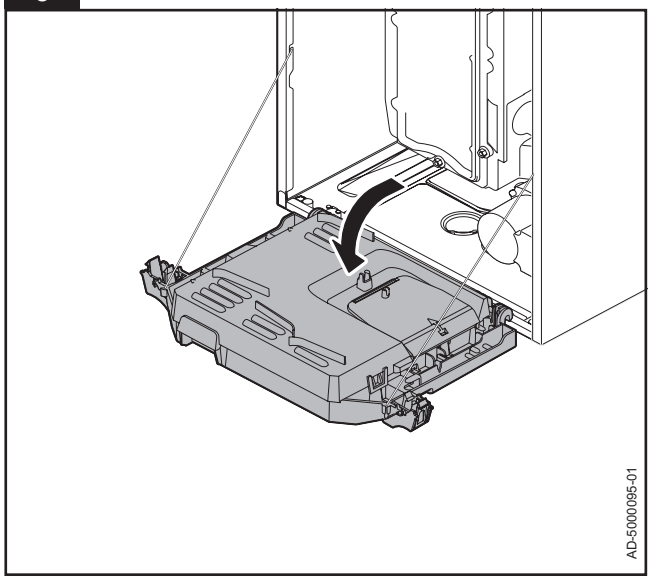
AD-5000095-01

6

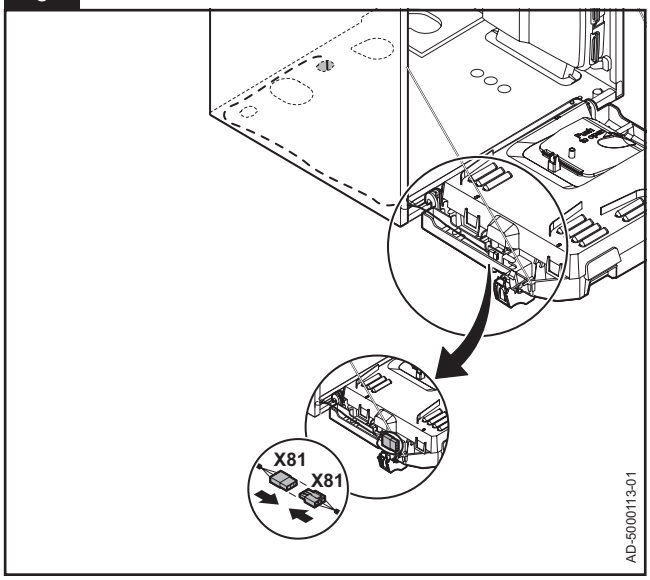
X81
X81
AD-5000113-01

7

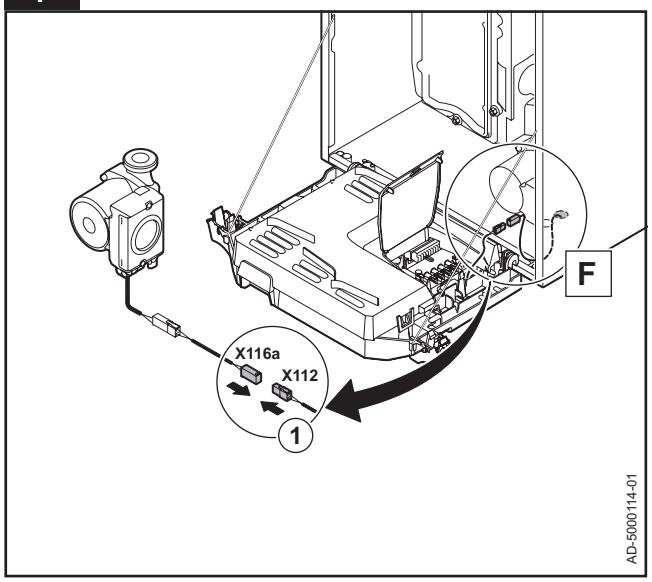
X116a
X112
1
F
AD-5000114-01

8

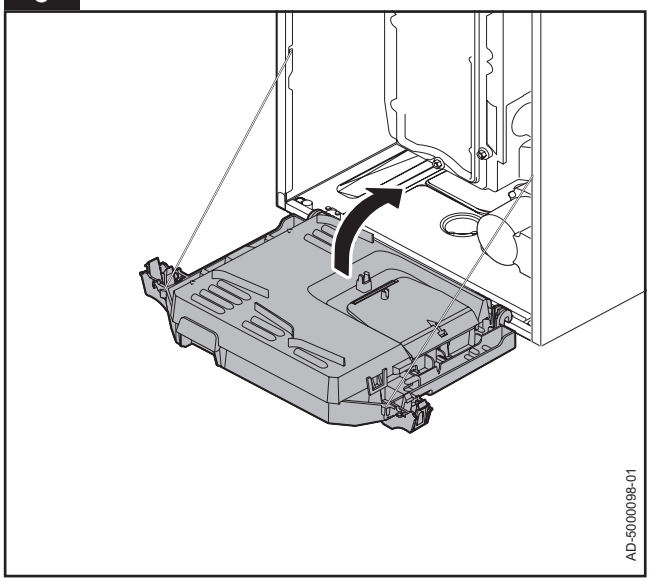
AD-5000098-01

9

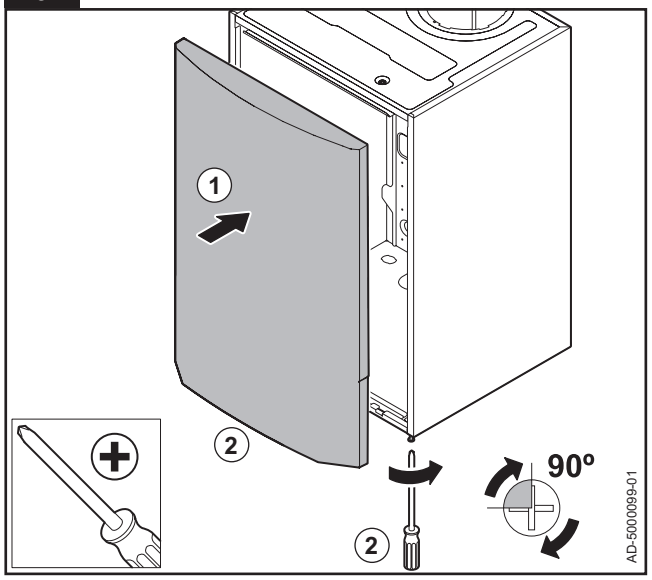
1
2
2
90°
AD-5000099-01

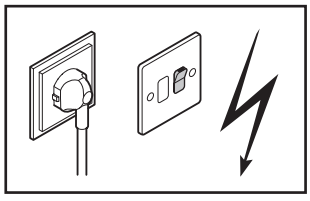

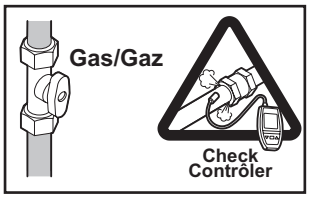
Gas/Gaz
Check
Contrôler

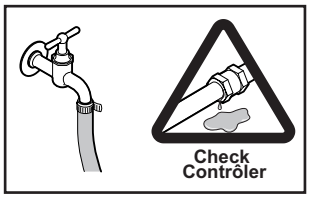
Check
Contrôler

© Copyright

All technical and technological information contained in these technical instructions, as well as any drawings and technical descriptions supplied, remain our property and shall not be multiplied without our prior consent in writing.

Ours is a policy of continuous development. We reserve the right to alter specifications without prior notification.
Subject to alterations.