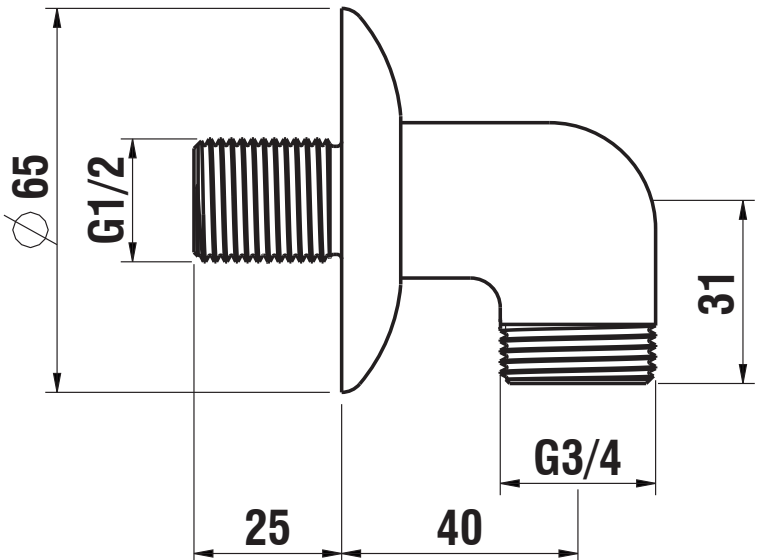
∅ 65
G1/2
31
G3/4
25
40