GEBERIT



Installation Manual

Montageanleitung
Instructions de montage
Istruzioni per il montaggio

KNOW HOW INSTALLED

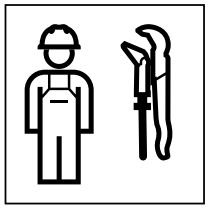

cm

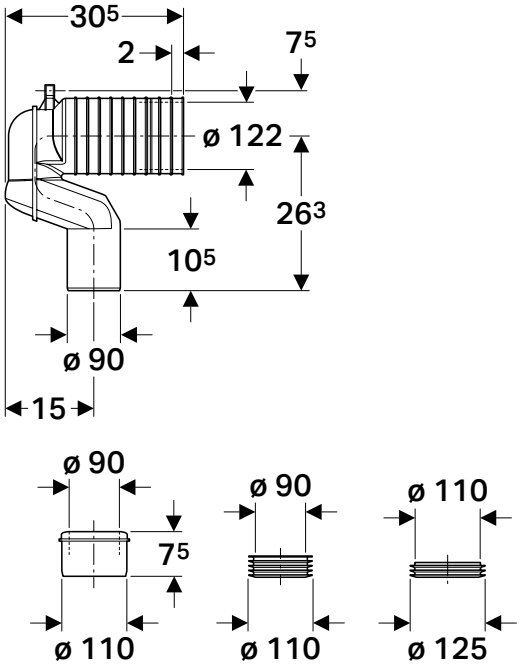

1

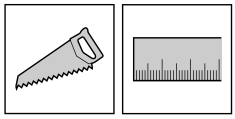

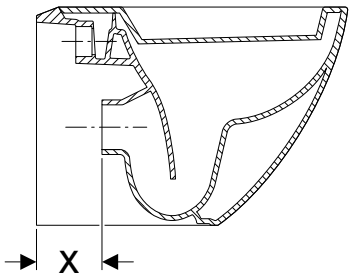

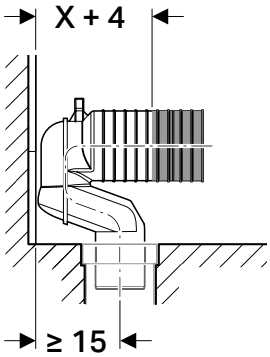

2

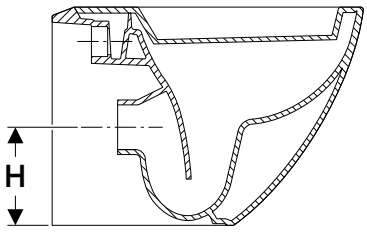

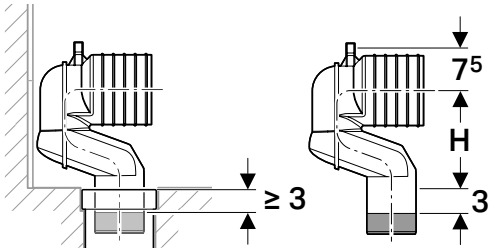

D64907-002 © 10-2014
966.532.00.0 (01)

3

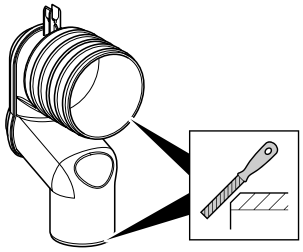

4

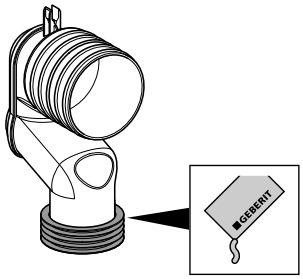

5

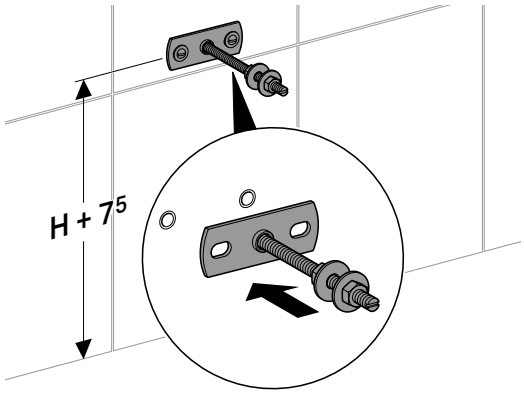

6

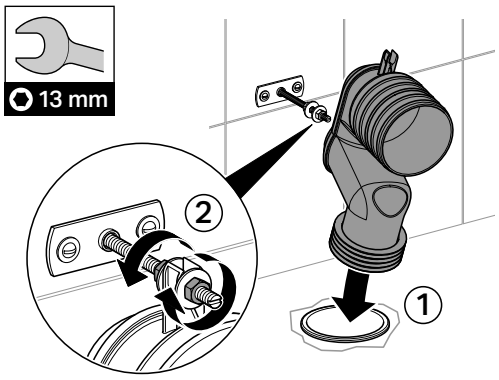

7



Geberit International AG
Schachenstrasse 77
CH-8645 Jona

T +41 55 221 63 00
F +41 55 221 63 16
documentation@geberit.com

→ www.geberit.com

D64907-002 © 10-2014
966.532.00.0 (01)