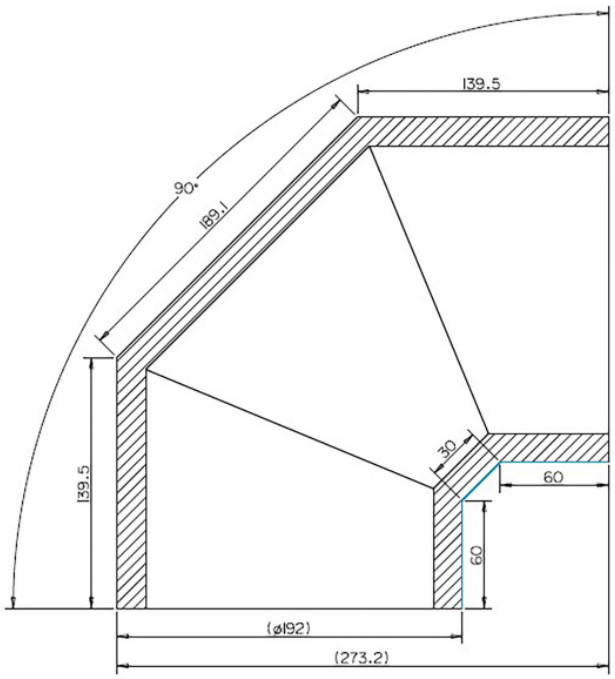

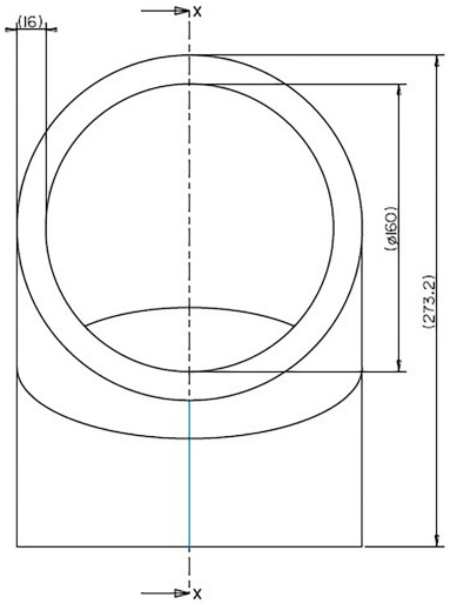

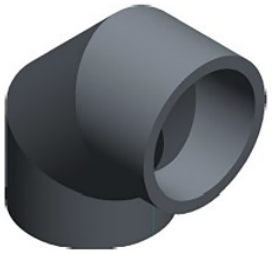

SECTION X-X

	D	Format and dimensions changed	22.01.14