taconova NOVAMIX VALUE





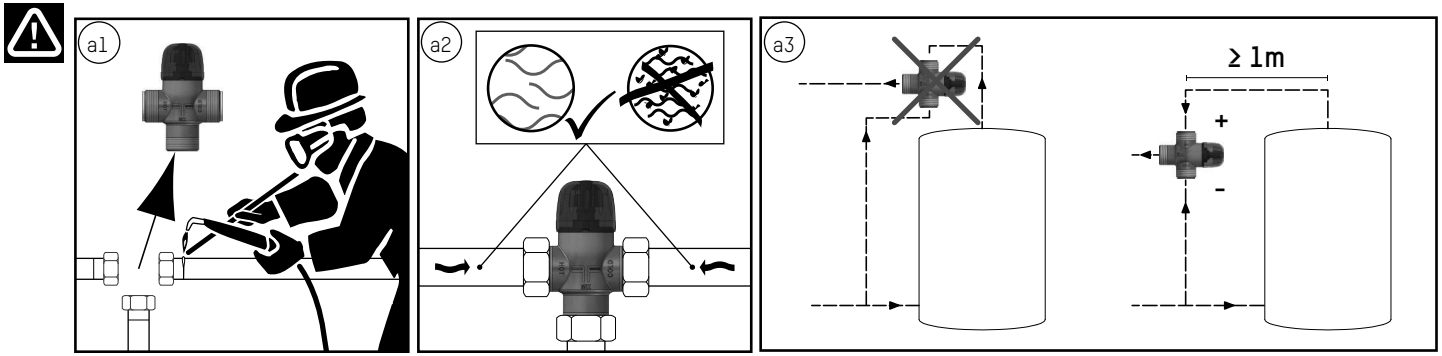

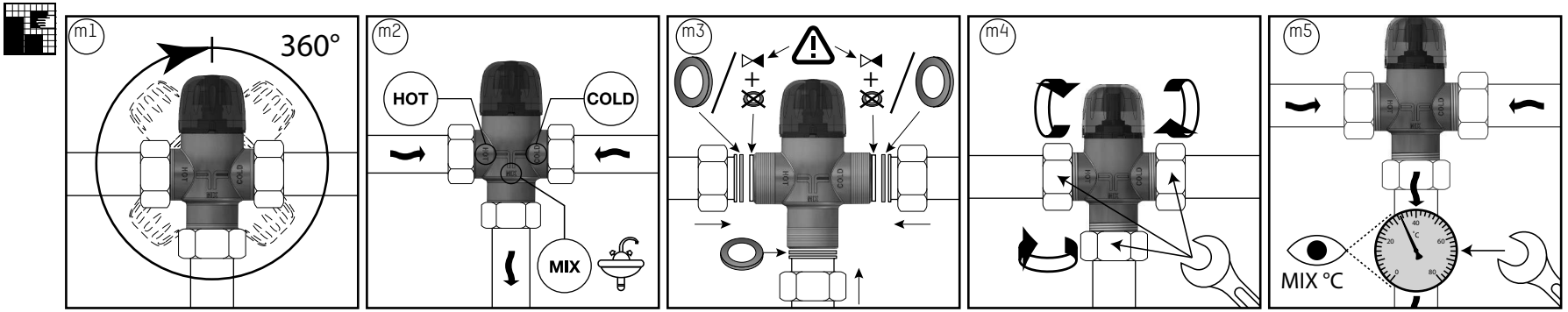

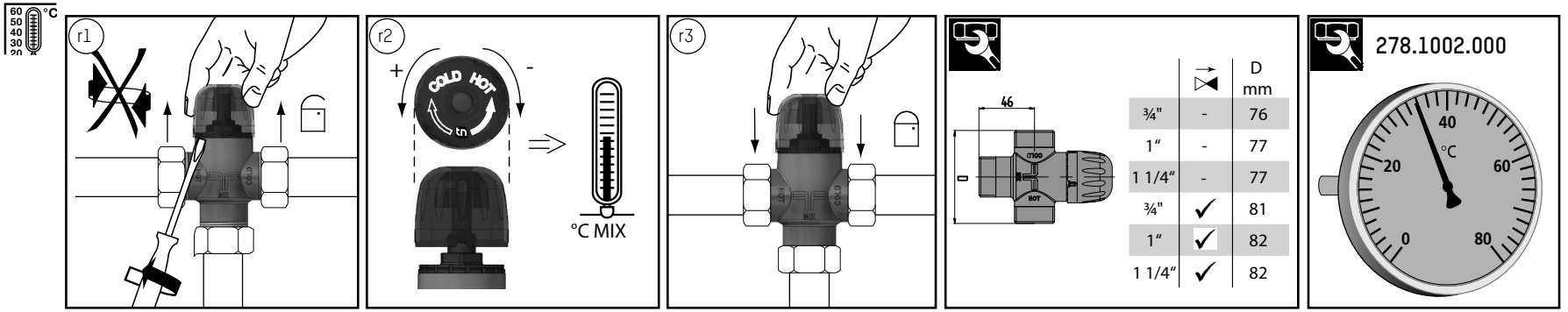

EN15092

KTW / W270

TÜV

NOVAMIX VALUE



¾", 1", 1 ¼"
298.5280.000: 45 – 65 + 35 – 70°C
298.5289.000: 20 – 50°C

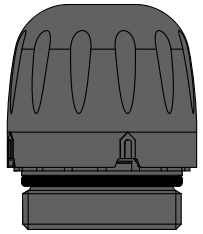

298.5281.000	45 – 65 °C	¾"
298.5282.000	45 – 65 °C	1"
298.5283.000	45 – 65 °C	1 ¼"
298.5284.000	35 – 70 °C	¾"
298.5284.000	35 – 70 °C	1"
298.5285.000	35 – 70 °C	1 ¼"
298.5284.000	20 – 50 °C	¾"
298.5285.000	20 – 50 °C	1"
298.5285.000	20 – 50 °C	1 ¼"

Version 45-65°C (EN 15092)	Version 35-70°C	Version 20-50°C	TB	PB	DN	G	
253.1002.___	253.2002.___	253.3002.___	100°C	10 bar	15	¾"	–
253.1003.___	253.2003.___	253.3003.___	100°C	10 bar	20	1"	–
253.1004.___	253.2004.___	253.3004.___	100°C	10 bar	25	1 ¼"	–
253.1102.___	253.2102.___	253.3102.___	90°C	10 bar	15	¾"	✓
253.1103.___	253.2103.___	253.3103.___	90°C	10 bar	20	1"	✓
253.1104.___	253.2104.___	253.3104.___	90°C	10 bar	25	1 ¼"	✓

¾" | DN 15

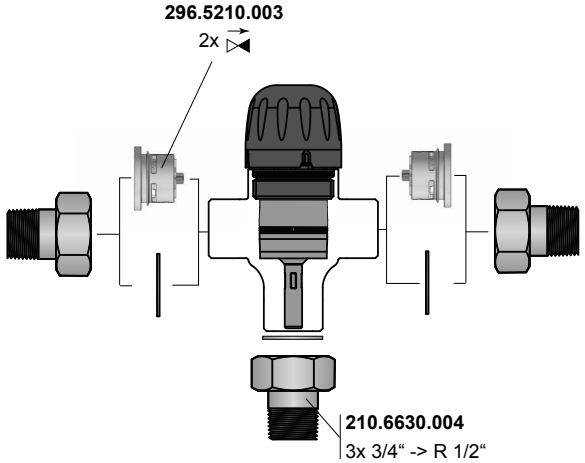

1" | DN 20

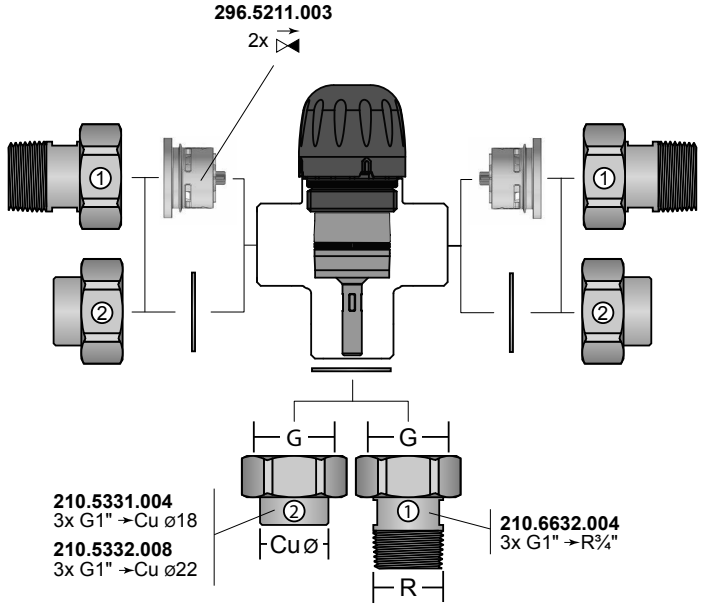

1¼" | DN 25

