# Endkappe

Standard, schrumpfbar

**Schrumpf-Endkappe, UNO**

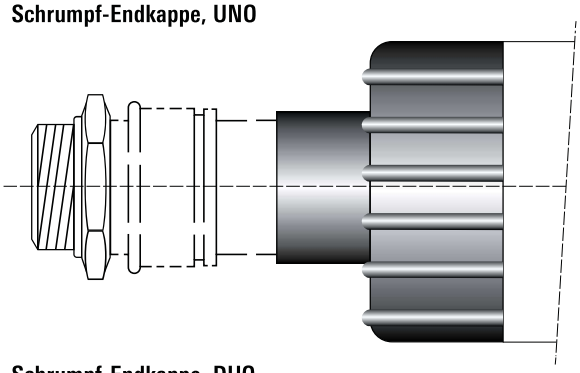

**Endkappe, UNO (LD-PE)**

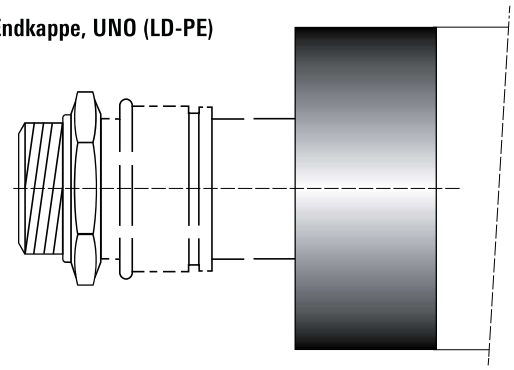

**Schrumpf-Endkappe, DUO**

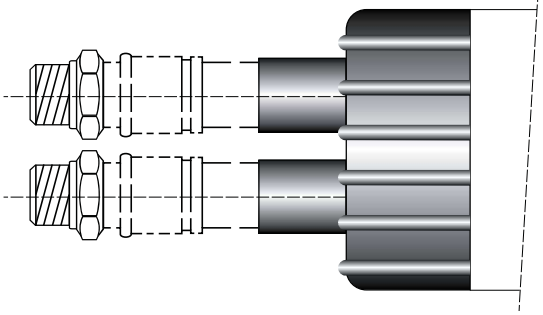

**Endkappe, DUO (LD-PE)**

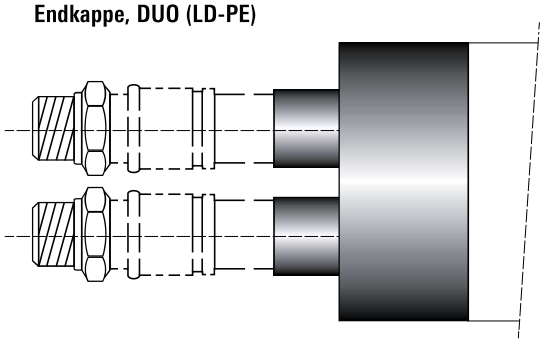

**Schrumpf-Endkappe, QUADRIGA**

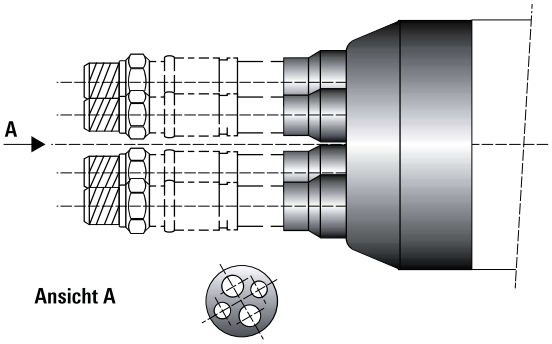


**Endkappe, QUADRIGA (LD-PE)**

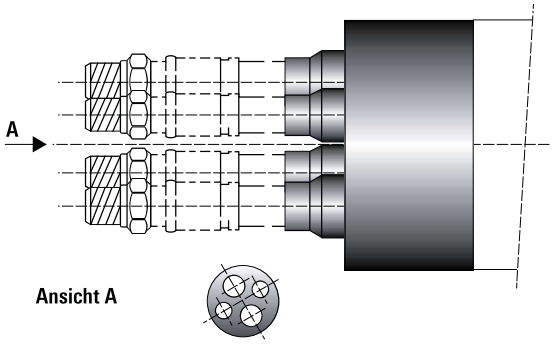


**CALPEX UNO**

| Typ Heizung | Typ Sanitär |
|---|---|
| 25/ 76 | 22/ 76 |
| 25/ 91 PLUS | 28/ 76 |
| 32/ 76 | 32/ 76 |
| 32/ 91 PLUS | 32/111 HBK |
| 40/ 91 | 40/ 91 |
| 40/111 PLUS | 40/126 HBK |
| 50/111 | 50/111 |
| 50/126 PLUS | 50/126 HBK |
| 63/126 | 63/126 |
| 63/142 PLUS | |
| 75/142 | |
| 75/162 PLUS | |
| 90/162 | |
| 90/182 PLUS | |
| 110/162 | |
| 110/182 | |
| 125/182 | |
| 125/202 PLUS | |
| 140/202 | |

**CALPEX DUO**

| Typ |
|---|
| 25 + 25/ 91 |
| 25 + 25/111 PLUS |
| 28 + 22/ 91 |
| 32 + 22/111 |
| 32 + 32/111 |
| 32 + 32/126 PLUS |
| 40 + 28/126 |
| 40 + 40/126 |
| 40 + 40/142 PLUS |
| 50 + 32/126 |
| 50 + 50/162 |
| 50 + 50/182 PLUS |
| 63 + 63/182 |
| 63 + 63/202 PLUS |
| 75 + 75/202 |

**QUADRIGA**

| Typ |
|---|
| 25 + 25/28 + 22/142 |
| 32 + 32/28 + 22/142 |
| 32 + 32/32 + 22/142 |
| 40 + 40/40 + 28/162 |

Endkappen LD-PE werden aufgesteckt;
geeignet für trockene Räume